The Teratology Society 2007 Strategic Planning Session: A Desire to Inspire

Abstract:

On April 18-20, 2007, the Teratology Society held its third strategic planning session (SPS) in San Diego, CA. The purpose of this session was to build on the successful work generated by the previous strategic plans [Nashville, TN 2002 and Cincinnati, OH 1997] and importantly, to provide a path forward to inspire the Society, create deeper connections with members that speak to their individual passion for the science of teratology and to increase the Society's visibility within the larger scientific community. The following summary report provides an overview of the session's pre-work, objectives, and discussions. A total of 24 attendees were present at the session. The group included representation from Council, various committees, and different member constituencies. This plan and the activities subsequent to the session will provide a path forward for our Society for the next five years.

In keeping with the Teratology Society's ten-year history of formal strategic planning, goal-setting, and measurement of success towards achievement of milestones, the Society organized its third strategic planning session (SPS) held April 18-20, 2007 in San Diego, CA. The purpose of this strategic planning session was to build on the two previous strategic plans, as well as to address current and projected challenges facing the Society. A summary of the general approach to this session, the process, and the products are presented here as one means for the Society's membership to engage with the strategic plan and to facilitate participation in its further development and implementation.

Following discussions between the Teratology Society Council and the Strategic Planning Organizing Committee, a key theme for the 2007 session was identified "*a desire to inspire*": to create deeper connections with members that speak to their individual passion for teratology and to increase the Society's visibility within the larger scientific community. Within this overall theme, the intent of the session was to revisit the Society's mission, vision, and goals, and to develop a realistic action plan to carry out recommended strategies. More specifically, three areas of focus were selected for the 2007 session: 1) scientific excellence and leadership, 2) membership recruitment and retention, and 3) outreach and partnership. These focus areas were addressed in the context of defining the role of the Teratology Society today and its relationship with other sectors and organizations to enhance our science, education/training and a stronger integration of our field into the biomedical research community.

The choice of a visionary theme also guided the selection of the meeting facilitator and the general approach for the tasks assigned to participants. As a result, Appreciative Inquiry (AI), a process intended to generate and build on inspiration, was chosen as the framework for this session. AI is a process of engaging participants in renewal, change, and performance through a focus on *valuing* what has worked from the past, *recognizing* the best that currently exists in the organization, and *inquiring, exploring, and discovering* ways to use its strengths and the desires of its membership.

SPS Attendees: Barbara Abbott US EPA, Edward Carney The Dow Chemical Company, Christina Chambers UCSD Medical Center, Michael Collins UCLA School of Public Health, George Daston Procter & Gamble Company, Robert Ellis-Hutchings US EPA, Elaine Faustman University of Washington, Karen Filkins, Deborah Hansen FDA/National Center For Toxicological Research, Kok-Wah Hew Takeda Global Research & Development Center, Inc., Thomas Knudsen University of Louisville and USEPA, Philip Mirkes Center For Environmental & Rural Health, Michael O'Hara Novartis Pharmaceuticals, Janine Polifka University of Washington/TERIS, Dana Shuey Endo Pharmaceuticals, Inc., Amar Singh University of Louisville, Donald Stump WIL Research Laboratories, LLC, Melissa Tassinari Pfizer Inc., Ida Washington University of Washington, Sonja Rasmussen CDC, Joshua Robinson University of Washington, Eias Zahalka BioReliance, Judy Buelke-Sam Toxicology Services, Wafa Harrouk FDA/CDER/ONP/DNCE. Facilitators: Doug Martin and Ivy Chan of RWD Technologies.

A strengths-based approach to planning for change, AI proved to be an effective means to engage our members throughout the strategic planning process, from the pre-work through the session itself, to the creation of this strategic plan. This was in contrast to a more traditional problem solving approach, which would be centered on identifying what is not working and then moving directly to problem-solving. The intent of the AI approach was to come together to create a vision of what the Society is at its best, to surface from each participant what is at the core of the Society for them, and how to bring these ideas together to create a shared meaning and inspire forward movement.

Figure 1 provides a look at AI in contrast with a traditional problem-solving, deficit-based approach to change.

Figure 1: Appreciative Inquiry

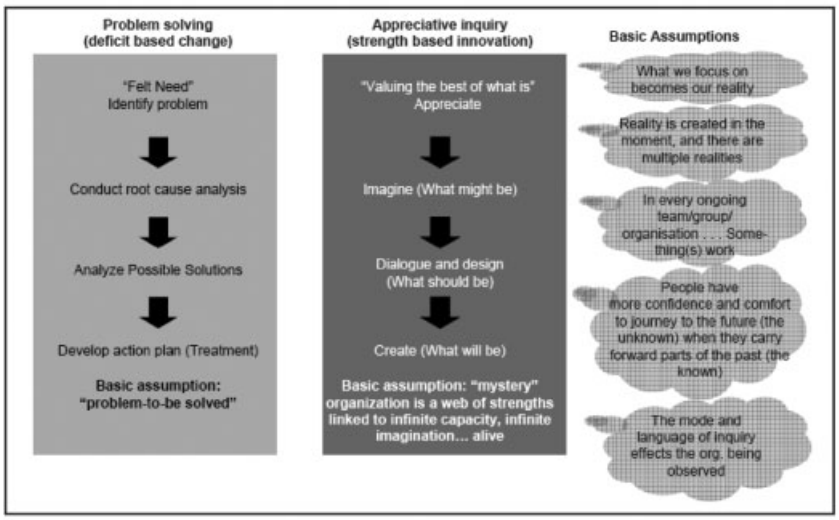

The AI process consists of four steps including Discovery – appreciate the best of what is; Dream - imagine what might be; Design - determine what should be; and Deliver – create what will be.

Reprinted with the permission of RWD Technologies, LLC

The process began with a series of pre-meeting activities to determine the base line for the strategic planning session. Both a Web based survey to the entire membership and in-depth interviews with the strategic planning attendees were conducted. The questions were designed not only to test the level of understanding of the membership on the existing strategic imperatives but also to elicit membership opinions on the future for the Society. The survey analysis and the interviews were conducted by the meeting facilitators and included: testing the commitment and appropriateness of existing strategy and focus areas, identifying any elements of the mission or vision that may be missing, soliciting each member's biggest hopes for the Society and proposing outrageous, out-of-the-box solutions for the identified challenges to the Society.

A web survey was distributed via email to the entire membership with the exception of the 24 strategic session participants (Appendix A). There were 116 respondents to the survey (a 17% response rate). While this is a typical response for this type of survey, the proportion of respondents from the total membership must be kept in mind as the highlights are considered. At the strategic session, the survey results were discussed in light of the agreed areas of focus of scientific excellence, outreach/partnership, communication and membership.

Highlights from the Web survey:

- Most respondents believe that the Society's current strategy is relevant for the future (84%), although some remain unclear about the specifics of the strategy and specific focus areas.

- Although 40% of the respondents indicated a clear understanding of the Society's strategic goals, more of the respondents were neutral (29%) or disagreed/did not know (30%).
- Close to 50% of the respondents agreed or strongly agreed the Society is choosing the right areas to focus on but almost 25% were neutral and 17% did not know.
- Many of the respondents (36%) did not know if there was overlap in the Society's committee responsibilities, but have found one or more of the committees to be helpful (36%).
- The top three most helpful committees were:
  - Education Committee (51%)
  - Program Committee (49%)
  - Public Affairs Committee (42%)
- When asked to rank the focus areas that were identified from the previous strategic planning sessions, a large majority of respondents (76%) ranked scientific excellence and leadership as the top priority.
- About 60% of respondents felt that communication is encouraged within the Society. The remaining disagreed (13%), were neutral (15%), or did not know (12%).
- About 40% of respondents felt that knowledge and information is shared openly within the Society. The remaining disagreed (20%), were neutral (17%), or did not know (15%).

Telephone interviews were conducted with all session participants prior to the session. The interviews (Appendix B) were conducted using questions very similar to those in the web survey. The themes that emerged in the telephone interviews paralleled the themes from the web survey.

The phone survey re-affirmed that the Society is currently focused on the right areas and felt that the Society's mission will remain relevant over the next five years. Session participants felt that committees are structured to achieve the Society's mission, work hard and in general perform well. A discussion ensued that focused on how to optimize committee work, to clarify objectives, and conduct business throughout the year, between annual meetings. A common theme emerged that further engagement of membership should occur with enhancement of shared information and communication. Session participants felt that sharing information and improved communication is a key strategic intent. For example, communication was considered to be good between some committees and Council, but was not consistent with members at large.

The phone interviews identified key descriptors that defined what is most appealing about the Society. These included: diversity (breadth of backgrounds and areas of expertise), welcoming/nurturing environment, especially for students and trainees (the Society is described as a smaller more intimate group with more engaged members than some other professional organizations), and passion (members have been responsible for significant scientific achievements, feel passionate about their work and their contribution to the scientific community and the public at large).

The group also identified some exciting opportunity areas for the Society. These included: developing a reputation as a resource hub or the "go to" organization for information on birth defects, focusing on promotion of the science and advocacy, increasing membership in specific specialty areas, and increasing visibility and recognition of the Society. The need to better integrate and maximize interactions between the sister societies who meet together annually was recognized as a central component for many of the desired outcomes for the Society.

Lengthy discussions occurred during the phone interviews regarding the balance between the different disciplines and "professional homes" with the desire for all – academia, industry, government and clinical sectors to be encouraged to participate. It was also noted that

challenges in obtaining funding for research and meeting travel is a core issue which impact all facets of the Society.

Before beginning the SPS, the impressions gathered by the facilitators from the interviews with attendees were summarized.

- A passion exists in the members for our science and its applications.
- A real affection exists for the founders and between the other members of the Teratology Society.
- The Society is united around the "strategic focus areas" only to the extent that they are broad, non-specific, and without goals that might change the status quo.
- The real problem is not the absence of a strategic plan – it is the absence of a shared identity and clarity of purpose.
- A secondary problem is that the Society is not organized to accomplish what the Society has identified as what is desirable to do.
- A real conflict exists under the surface about who the Society is and what it should be.

In the opening session of the SPS, participants reviewed the collected data and engaged in a structured open dialogue about their impressions and thoughts. Several key themes emerged, focusing on what the Society means to participants and what the Society wants to be (how it wants to present itself) to the public. Some of these included: "If primary attraction is annual meeting, how do we make it attractive?"; "Teratology is my scientific home" (how do we share this?); "How do we open up Society to participation (communication with committees) and leverage people's interests?"; and "Vitality hinges on recruitment of members in specific areas."

The next step in the process was *Discovery*; to define what is best in the Society – looking at what is working, what participants appreciate most about the organization, and taking these strengths to build a desired future. Each person paired up with another participant they did not know well and spent 60 minutes interviewing each other. Participants asked the following questions:

1. **PEAK EXPERIENCE** – Tell a story about a time when you felt most alive and engaged, joining with others to accomplish something important that you could not do alone.
2. **VALUING** – What do you value most about yourself, your work, and the Society?
3. **CORE LIFE-GIVING FACTORS** – For you, what is at the core of joining with others in this field? What draws you to join, participate, and contribute to this Society?
4. **TRENDS** – What are the macro trends in the external environment that you see that are relevant to the Society and its goals?
5. **WISHES FOR THE FUTURE** – You fall into a deep sleep and wake up in 2010. The Society has been transformed in keeping with your deepest wishes…
    - What's happening that's different?
    - How do you know?
    - What happened to allow the Society to achieve these results?
    - What three wishes/visions do you have that would make that transformation possible?

After the paired interview exchanges, participants shared the stories they heard from their interview partners, and identified the common themes. The key themes that emerged were:

- ❖ <u>The Society is unique in its shared scientific identity/multi-disciplinary (translational) approach</u>. We need to draw on this strength and emphasize our shared scientific identity to increase visibility. A systems-based approach should be integrated in everything we do. (Keywords: multi-factorial, integrative, synthesis, all united by a common purpose/cause)

- Membership is important. We need to retain existing members and attract new ones. This focus includes engaging existing members, sustaining a culture of mentorship, and recruiting new members from specific constituencies.
- The Society needs to increase its external visibility; perhaps an advocacy approach is needed.
- The annual meeting is a key component that integrates all three of the themes above. If it is what draws people to the Society and keeps them engaged, we should explore how we can improve the structure. This includes increasing the coordinated planning and integration of the sister societies, OTIS and NBTS, at the annual meeting.
- Communication, both externally and internally, is critical to enabling the other themes.

With the key themes identified, teams were then asked to put together their *Dream* of what the Society would look like if all these themes were present. These themes became the strategic intentions for the Society. Reflecting on the identified themes, participants then initiated the *Design* phase. Each was asked to make a commitment to making the dreams into reality. Based on those commitments, the SPS participants assembled into working groups to begin discussions on the elements of action associated with one of five themes above.

The next step was strategic planning based on the *Design* activities. The group used the Work Diagram approach, which is a method that looks at all the factors needed to achieve a specific strategic intent. This approach guided the working groups to help define the elements needed to deliver the outcome (Figure 2).

Figure 2: Work Diagram

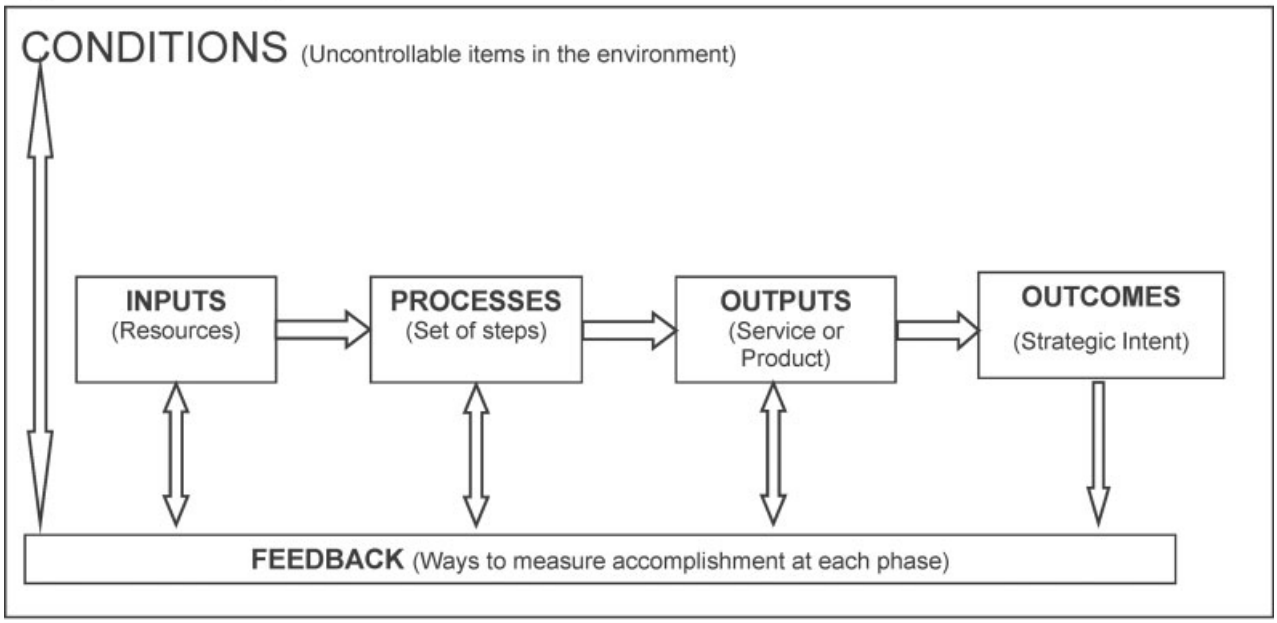

Based on The Language of Work model of Danny Langdon

As a result of the *Dreams* described and using the Work Diagrams as the framework, the group developed the following strategic intentions for the Society:

- **Membership:** Current and prospective members have been identified and engaged as active participants in the mission of the Teratology Society.
- **Visibility**: The Teratology Society is recognized as the premier center of scientific excellence and a voice for the advancement of prenatal and child health.
- **Shared Scientific Identity:** Systems-based approaches have become integral and are evident in the Society's culture.
- **Communication:** The goals, work, and membership of the Teratology Society and its internal committees are transparent, engender mutual trust and commitment, and demonstrate the multi-disciplinary nature of the Society. Our journals are growing in quality and number of submissions. (This strategic intent looks at how to address year-round efforts for communication so that the Society is not just a once a year thought.)
- **Annual meeting:** The annual meeting showcases the value of the multi-disciplinary nature of the Society.

The participants formed working groups and developed specific deliverables needed to achieve each strategic intention. Participants noted the processes that should be designed to achieve these deliverables, inputs needed, conditions that the Society must account for, and the specific feedback that must be monitored in their production. Each working group included within their work diagrams at least one standing Society committee to review and recommend changes, if any, to the structure and function of that committee. As an exercise to evaluate what would be needed to be successful for each strategic intention, the outputs were reviewed to define the accountability and resources needed to achieve them.

The strategic planning session of the Teratology Society was a success. Using the method of Appreciative Inquiry, participants engaged in the discussion of the future of the Teratology Society with an increasing measure of enthusiasm as the meeting progressed. Specific strategic intentions were articulated that are clear and measurable. These strategic intentions addressed and expanded upon the key topic areas initially set out by Council for this planning session. Work diagrams were constructed that show how each of the intentions may be accomplished over time and should specifically guide the work for the next two years.

The observations from the session pre-work were validated by the attendees and confirmed in the dialogue and discussions of the session. The mutual respect that the attendees brought into the session for each other and each others' expertise and field of science helped to quickly get to the heart of the issues above. The session was designed specifically to build on that mutual respect, and develop mutual trust that "my field" and "my contribution" to the science of teratology would be protected and preserved by fellow attendees as the group worked together to identify the strategic intents with which to lead the Society forward. The AI approach was very successful in helping the group unite in support for the set of strategic intentions and the work diagrams that described how to achieve them by the end of the session.

There are two major challenges that face the Teratology Society in bridging the gap between the strategic planning that was accomplished and its realization of the strategic intentions:

- How does the Society re-create in the larger membership the feelings of mutual respect and mutual trust found through the course of the session by the attendees?
- How does the Society communicate and engage the members who were not at the meeting, enlighten them on the context and meaning behind the strategic intentions, and share the passion and commitment of the attendees in their achievement?

These two issues are interdependent, in that each requires the other for resolution.

Working groups were established for each of the strategic intents in order to prioritize and finalize recommendations. This work was initially presented in a progress report at the 2007

annual meeting in Pittsburgh. The response and follow-up from the membership has been extraordinarily exciting. Working groups have been enhanced with broader membership participation based on volunteers from the meeting discussions.

The Council supports these working groups and has charged them to continue the process of implementing the recommendations forming the deliverables of each strategic intent. Progress from the working groups will be reported at the 2008 annual meeting. The tasks assigned to these five *ad hoc* groups and their interface with Council, committees, and the entire membership, as well as challenges to be overcome, are summarized as follows:

1) The Society should use the SPS work groups to communicate each strategic intention, its context, encourage debate and dialogue, to the larger membership. The more these teams focus on the mutual respect and mutual trust aspects of their work together, the better the motivation for and genesis of the strategic intention will be communicated.

2) Specifically, each SPS work group will be given the lead for preparing recommendations to the Society and will help implement the components of their strategic intention. The recommendations will guide the Council as to which committees should be assigned the work, the necessary resources for each committee, and whether charter changes and/or revisions to Society Constitution and Bylaws are needed. *Ad hoc* committees may be needed to fulfill work that exists in a gap of the committee structure or that will not wait until the necessary charter/Bylaws modifications can be completed.

3) When the required resources and Constitution/Bylaws changes have been estimated and implemented, Council should lead the process of engaging each committee with the achievement of each of the strategic intentions. Council will engage the SPS work group with each committee, so the richness of the different viewpoints, experience and contributions of the many members who made up the SPS work group can be added to the committee's experience in learning the intentions, and hearing the SPS group's view of what it will take to achieve them.

4) Successfully transferring ownership of the completion of outputs for strategic intentions from SPS working groups to the relevant committees cannot be accomplished in a meeting, and particularly not with a phone call. It will take several meetings, over months, with adjustments to language and plans that accommodate the committees' inputs. The leadership of the Society is committed to this process with specific intentions and their shared vision over this period, so that the power of the vision and the energy to implement is not lost.

5) Lack of leadership tenure was identified as an impediment to constancy of purpose. Council must address this issue, possibly through Bylaws changes or special negotiations and alignment of sessions between immediate-past-leaders, current leadership and the leadership-elect. Constancy over a couple of years' timeframe is key for the success of the Society and for any hope of successfully implementing these intentions.

Final Charge

With publication of this meeting summary and the availability of the full session report on the Society Website, the Teratology Society Council pledges their commitment to inspiring our members to engage to make the Society truly the organization of the vision. The Society's Website is intended to play an integral role in this process both as a component of many of the strategic intents, and as a vehicle for communicating progress and soliciting input from the membership as the refinement and implementation of the Strategic Plan takes place. Special thanks must be given to the SPS planning committee and the meeting facilitators to encourage our Society to *Dream*. The path forward in is now place to embrace our scientific excellence and shared identity. We look forward to working together to achieve success.

A DESIRE TO INSPIRE

APPENDIX A: WEB SURVEY QUESTIONS

STRATEGIC FOCUS

- Our Society's mission is relevant for the next five or ten years.
- I have a clear understanding of the Society's strategic goals.
    - o If agreed, please state in a short statement your understanding of the Society's current strategy.
- We are choosing the right areas to focus on.
- Our strategy is consistent with the realities of the environment in which we operate.
- The following have been identified in previous strategic planning sessions as strategic focus areas for the Society. Please rank the following items based on your perception of their priority to the Society.
    - o Scientific excellence and leadership
    - o Membership – recruitment and retention
    - o Outreach and participation – external relationships
    - o Visibility – internal and external brand
    - o Communication – journal and other communication processes, internal and external
    - o Organizational effectiveness – structural and operational efficiencies within the Society
    - o Management/Leadership effectiveness – management/leadership improvements

OPERATIONS

- I have a clear understanding of the purpose and objectives for each of the committees.
- One or more of the Society's committees have been helpful or of use to me (name which committees).
- There is overlap in the areas of focus within the different committees.
- I am a member of one or more committees. *(If yes, answer the questions below):*
    - o I am actively involved with the committee(s) I am a member of.
    - o I feel that the committee(s) I am a member of:
        - □ has/have a clear sense of purpose and objectives.
        - □ is/are efficient in getting things done
        - □ can make a clear contribution to one of the strategic focus areas of the Society
        - □ has/have the appropriate leadership and structure needed to be successful
- The council members understand their role and are effective in leading the Society.
- Information and knowledge is shared openly within the Society.
- Communication is encouraged within the Society.
- The Society is good at measuring and tracking successes.

POINT OF VIEW - short text responses.

- What is the most difficult or frustrating thing about being a part of this Society?
- What is the most appealing or rewarding thing for you about being a part of this Society?
- What do you feel is the Society's biggest strength as an organization?
- What do you feel is the Society's biggest challenge as an organization?
- What is one area you feel would be an exciting opportunity for the Society?
- If you had three wishes for the Society and its future, what would they be?

APPENDIX B: TELEPHONE INTERVIEW QUESTIONS

STRATEGIC FOCUS

- What is your understanding of the Society's strategic goals?
- Are we choosing the right areas to focus on?
- Is our strategy consistent with the realities of the environment in which we operate?
- What do you feel is the Society's organizational capability to execute on the existing strategy? (Do we have the right budget and resources in place to execute our strategy?)
- Do you think our Society's mission will remain relevant for the next five or ten years?
- The following have been identified in previous strategic planning sessions as priorities for the Society. Please rank the following items based on your perception of their priority to the Society.
    - o Scientific excellence and leadership
    - o Membership – recruitment and retention
    - o Outreach and participation – external relationships
    - o Visibility – internal and external brand
    - o Communication – journal and other communication processes, internal and external
    - o Organizational effectiveness – structural and operational efficiencies within the Society
    - o Management/Leadership effectiveness – management/leadership improvements

OPERATIONS

- Do you think we have an appropriate number of committees currently in place?
- Do you have a clear understanding of the purpose and objectives for each of the committees?
- Do you believe the committees are an efficient means to achieving our objectives in the specific focus areas?
- Do you believe reorganizing the existing structure of committees may create new operational efficiencies?
- Do you feel there is any overlap in the areas of focus within the different committees?
- Are you a member of one or more committees? *(If yes, answer the questions below):*
    - o Are you actively involved with the committee(s)?
    - o Do you feel that the committee(s) you are a member of:
        - ☐ has/have a clear sense of purpose and objectives?
        - ☐ is/are efficient in getting things done?
        - ☐ has/have the appropriate leadership and structure needed to be successful in their charter?
        - ☐ can contribute to achieving the Society's strategic goals?
- Do you feel that:
    - o The council members understand their role and are effective in leading the Society?
    - o Information and knowledge is shared openly within the Society?
    - o Communication is encouraged within the Society?
    - o The Society is good at measuring and tracking successes?

APPRECIATIVE POINT OF VIEW

- What is most appealing or rewarding for you about being a part of this Society?
- What do you feel are the Society's strengths as an organization?
- What is one area you feel would be an exciting opportunity for the Society?
- If you have three wishes for the Society and its future, what would they be?

Teratology Society 48th Annual Meeting

June 28–July 2, 2008

Hyatt Regency Monterey

Monterey CA

32nd Annual Meeting of the Neurobehavioral Teratology Society (NBTS)

June 28–July 2, 2008

and the

21st International Conference of the Organization of Teratology Information Specialists (OTIS)

June 28–July 1, 2008

Continuing Medical Education Credit is provided through joint sponsorship with The American College of Obstetricians and Gynecologists (ACOG).

All text and graphics are © by the Teratology Society unless noted.
All Monterey photos are courtesy of the Monterey County Convention and Visitors Bureau and Monterey Convention Authority.

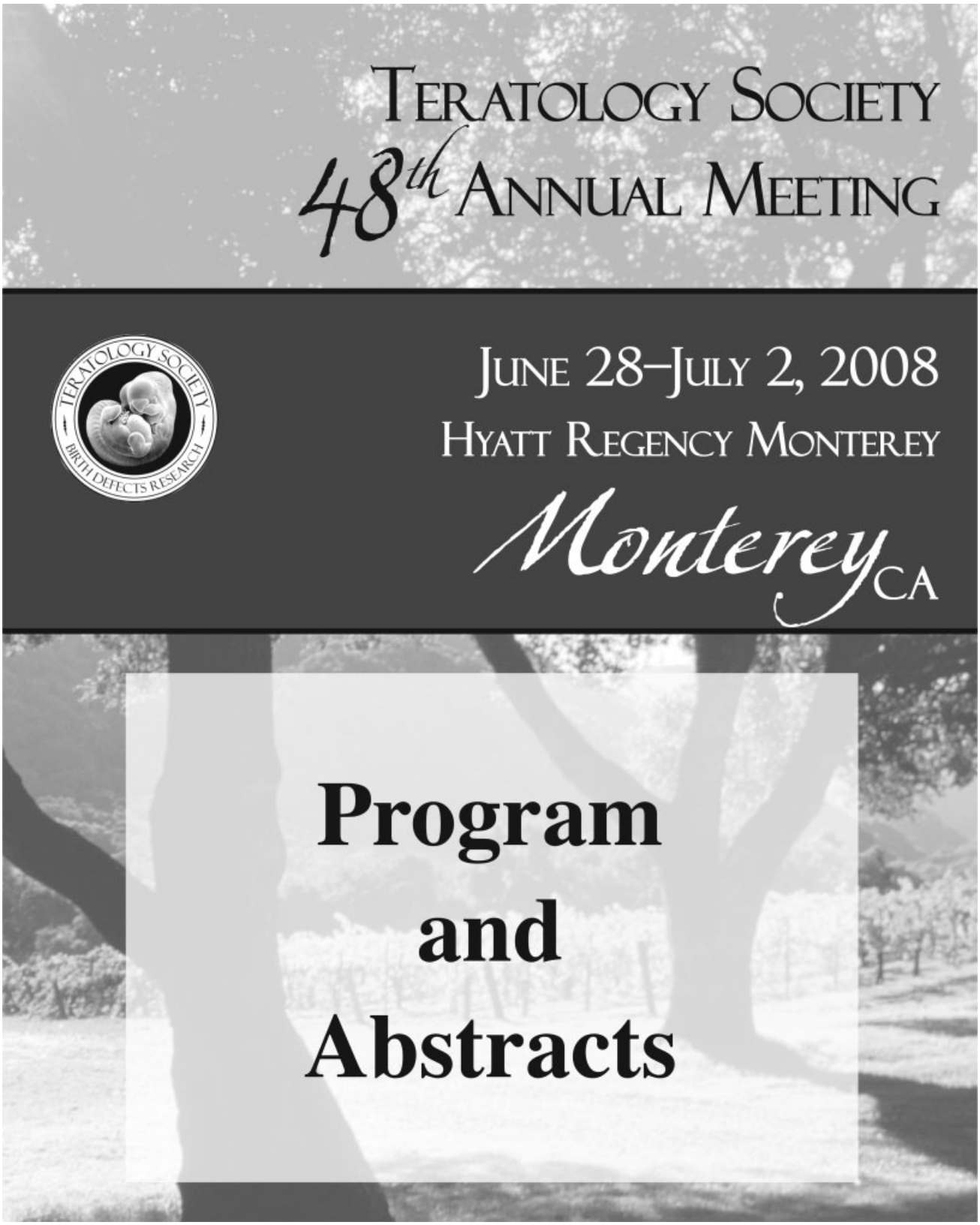
Teratology Society
48th Annual Meeting
June 28–July 2, 2008
Hyatt Regency Monterey
Monterey CA
Program
and
Abstracts

Program Overview

FRIDAY, JUNE 27, 2008

3:00 PM–5:00 PM
Registration

SATURDAY, JUNE 28, 2008

7:00 AM–6:00 PM
Registration

7:30 AM–8:00 AM
Education Course Breakfast

8:00 AM–5:15 PM
Education Course

12:15 PM–1:30 PM
Teratology Society XXXII Annual Volleyball Game

3:00 PM–6:30 PM
Council 1A Meeting

6:30 PM–9:30 PM
Council 1B Meeting and Committee Reports

SUNDAY, JUNE 29, 2008

7:00 AM–8:00 AM
BDRB Editorial Board Meeting

7:30 AM–8:15 AM
Finance Committee Meeting

8:00 AM–7:00 PM
Registration

8:00 AM–8:30 AM
Coffee and Continental Breakfast

8:30 AM–8:45 AM
President's Welcome

8:45 AM–9:45 AM
Josef Warkany Lecture

10:00 AM–12:30 PM
Student/Postdoctoral Fellow Platform Session I

12:30 PM–1:00 PM
F. Clarke Fraser Award

1:00 PM–2:00 PM
Education Committee Meeting

2:00 PM–2:30 PM
James G. Wilson Publication Award

2:30 PM–6:00 PM
March of Dimes Symposium
Embryonic and Fetal Hypoxia

6:00 PM–7:30 PM
Welcome Reception and Exhibits Open

7:30 PM–9:00 PM
BDRA Editorial Board Meeting

MONDAY, JUNE 30, 2008

7:00 AM–8:00 AM
Annual Meeting Working Group Meeting

7:00 AM–8:00 AM
Publications Committee Meeting

7:30 AM–6:00 PM
Registration

7:30 AM–8:00 AM
Coffee and Continental Breakfast

8:00 AM–8:30 AM
Special Lecture
Human Teratogens: Year in Review

8:30 AM–11:30 AM
TS/NBTS Joint Symposium
Pesticides and Neurodevelopment

8:30 AM–11:30 AM
Platform Session II

11:30 AM–1:00 PM
Past Presidents' Luncheon

11:30 AM–12:30 PM
Student Affairs Committee Meeting

1:00 PM–2:00 PM
Robert L. Brent Lecture
Can Maternal Hypertension Be Safely Treated During Pregnancy?

2:00 PM–4:30 PM
Nutrition and Food Safety
Pre-Conception to Adolescence Symposium

2:00 PM–4:30 PM
Joint TS/OTIS Platform Session III

4:30 PM–5:30 PM
Strategic Planning Session Update

5:30 PM–7:30 PM
TS/NBTS/OTIS Joint Poster Session and Exhibits Open

7:30 PM–9:30 PM
MARTA/MTA Student Career Event

TUESDAY, JULY 1, 2008

6:30 AM–7:00 AM
Sunrise Mini-Course Breakfast

7:00 AM–8:30 AM
Sunrise Mini-Course

7:00 AM–5:00 PM
Registration

8:00 AM–8:30 AM
Coffee and Continental Breakfast

8:30 AM–9:15 AM
Partnership Lecture
Signals from Above: The Normative Interactions of Embryos and the Environment

9:15 AM–11:45 AM
TS/OTIS Symposium
Identifying Risk Factors for Birth Defects: An Update on the National Birth Defects Prevention Study (NBDPS)

9:15 AM–11:45 AM
MARTA/MTA Symposium
Current Methods for Developmental Toxicity Screening

11:45 AM–1:30 PM
TS/NBTS Joint Poster Session and Exhibits Open

12:30 PM–1:30 PM
2009 Program Committee Meeting

1:30 PM–3:15 PM
Joint TS/NBTS Platform Session IV

1:30 PM–4:30 PM
Embryonic Stem Cells and Beyond Symposium

1:30 PM–5:30 PM
TS/OTIS/ISPE Joint Workshop
Pregnancy Registry Methods

4:30 PM–5:30 PM
National Children's Study Update

5:30 PM–7:00 PM
Special Session: Open Debate
One-Generation *versus* Multi-Generation Reproductive Toxicity Testing

5:30 PM–7:30 PM
Special Session
Teaching Embryology/Teratology in the 21st Century

WEDNESDAY, JULY 2, 2008

7:00 AM–8:00 AM
Public Affairs Committee Meeting

7:00 AM–8:00 AM
Working Group Oversight Committee Meeting

7:30 AM–2:00 PM
Registration

7:30 AM–8:00 AM
Coffee and Continental Breakfast

8:00 AM–10:00 AM
Platform Session V

8:00 AM–10:00 AM
Public Affairs Committee/ILSI HESI Vaccines Symposium

10:00 AM–10:30 AM
Warkany Tea

10:30 AM–12:15 PM
Platform Session VI

10:30 AM–12:30 PM
Rare Diseases Symposium

1:30 PM–4:30 PM
Wiley-Liss Symposium

4:30 PM–6:00 PM
Business Meeting and Reports from *BDR* Editors

6:30 PM–7:30 PM
Reception

7:30 PM–10:00 PM
Banquet

THURSDAY, JULY 3, 2008

7:00 AM–10:00 AM
Council 2 Meeting

Teratology Society

OFFICERS (2007–2008)

THOMAS B. KNUDSEN
President

CHRISTINA D. CHAMBERS
Vice President

BARBARA F. HALES
Vice President-elect

ELAINE M. FAUSTMAN
Past President

DEBORAH K. HANSEN
Secretary

IDA M. WASHINGTON
Treasurer

EDWARD W. CARNEY
Councilor (2005–2008)

KAREN A. AUGUSTINE
Councilor (2006–2009)

DANA L. SHUEY
Councilor (2007–2010)

PAST PRESIDENTS OF THE SOCIETY

J. WARKANY
1960–1961

J.G. WILSON
1961–1962

F.C. FRASER
1962–1963

M.M. NELSON
1963–1964

D.A. KARNOFSKY
1964–1965

I.W. MONIE
1965–1966

S.Q. COHLAN
1965–1966

M.N. RUNNER
1966–1967

R.L. BRENT
1967–1968

T.H. SHEPARD
1968–1969

R.W. MILLER
1969–1970

J. LANGMAN
1970–1971

A. PRUZANSKY
1971–1972

D.G. TRASLER
1972–1973

J.R. MILLER
1973–1974

E.M. JOHNSON
1974–1975

L.S. HURLEY
1975–1976

J.L. SEVER
1976–1977

E.V. PERRIN
1977–1978

A.R. BEAUDOIN
1978–1979

R.M. HOAR
1979–1980

C.R. SWINYARD
1980–1981

W.J. SCOTT, JR.
1981–1982

D.M. KOCHHAR
1982–1983

R.E. STAPLES
1983–1984

G.P. OAKLEY, JR.
1984–1985

L.B. HOLMES
1985–1986

A.G. HENDRICKX
1986–1987

C.T. GRABOWSKI
1987–1988

M.S. CHRISTIAN
1988–1989

E.F. ZIMMERMAN
1989–1990

C.A. KIMMEL
1990–1991

R.K. MILLER
1991–1992

M. BARR, JR.
1992–1993

J.W. HANSON
1993–1994

J.M. DESESSO
1994–1995

K.K. SULIK
1995–1996

J.F. CORDERO
1996–1997

P.E. MIRKES
1997–1998

A.R. SCIALLI
1998–1999

G.P. DASTON
1999–2000

R.J. KAVLOCK
2000–2001

J.M. FRIEDMAN
2001–2002

W. SLIKKER, JR.
2002–2003

R.W. TYL
2003–2004

K.L. JONES
2004–2005

M.S. TASSINARI
2005–2006

E.M. FAUSTMAN
2006–2007

HEADQUARTERS STAFF

TONIA M. MASSON
Executive Director

BECCA RHAME
Program Manager

HEIDI PRANGE
Director of Meetings

LIZ KASABIAN
Exhibits Manager

MIA MCDANIEL
Administrative Assistant

Teratology Society
1821 Michael Faraday Drive, Suite 300 • Reston, VA 20190
Tel: (703) 438-3104 • Fax: (703) 438-3113 • E-mail: tshq@teratology.org

COMMITTEES OF THE TERATOLOGY SOCIETY (2007–2008)

CONSTITUTION AND BY-LAWS COMMITTEE

Kok-Wah Hew, Ph.D. — Chair
Tel: (224) 554-5379 — Fax: (224) 554-7848
E-mail: khew@tgrd.com

Harpal S. Buttar, D.V.M., Ph.D. — 2008
Tel: (613) 941-2118 — Fax: (613) 941-1365
E-mail: harpal_buttar@hc-sc.gc.ca

Gloria D. Jahnke, D.V.M. — 2009
Tel: (919) 967-5558 — Fax: (919) 967-5558
E-mail: Gjahnke@bellsouth.net

Sandra L. Wood — 2010
Tel: (215) 652-6334 — Fax: (215) 652-7758
E-mail: sandra_wood2@merck.com

Thomas B. Knudsen, Ph.D. — President
Tel: (919) 541-9776 — Fax: (919) 541-1194
E-mail: knudsen.thomas@epa.gov

George R. Clemens, Ph.D. — Past Chair
Tel: (650) 624-1377 — Fax: (650) 624-1282
E-mail: gclemens@rigel.com

COUNCIL

Thomas B. Knudsen, Ph.D. — President
Tel: (919) 541-9776 — Fax: (919) 541-1194
E-mail: knudsen.thomas@epa.gov

Christina D. Chambers, Ph.D., M.P.H. — Vice President
Tel: (619) 294-3791 — Fax: (619) 220-0228
E-mail: chchambers@ucsd.edu

Barbara F. Hales, Ph.D. — Vice President-elect
Tel: (514) 398-3610 — Fax: (514) 398-7120
E-mail: barbara.hales@mcgill.ca

Elaine M. Faustman, Ph.D. — Past President
Tel: (206) 685-2269 — Fax: (206) 685-4696
E-mail: faustman@u.washington.edu

Deborah K. Hansen, Ph.D. — 2009 Secretary
Tel: (870) 543-7480
E-mail: deborah.hansen@fda.hhs.gov

Ida M. Washington, D.V.M., Ph.D. — 2010 Treasurer
Tel: (206) 543-0474 — Fax: (206) 685-3006
E-mail: idaw@u.washington.edu

Karen A. Augustine, Ph.D. — 2009 Councilor
Tel: (609) 818-3406 — Fax: (732) 227-3982
E-mail: karen.augustine@bms.com

Edward W. Carney, Ph.D. — 2008 Councilor
Tel: (989) 636-2580 — Fax: (989) 638-9863
E-mail: ecarney@dow.com

Dana L. Shuey, Ph.D., D.A.B.T. — 2010 Councilor
Tel: (610) 558-9800 — Fax: (610) 387-4094
E-mail: shuey.dana@endo.com

Patricia M. Bittner, M.S. — Public Affairs Committee Chair
Tel: (301) 504-7263 — Fax: (301) 504-0137
E-mail: pbittner@cpsc.gov

Mark E. Hurtt, Ph.D. — Publications Committee Chair
Tel: (860) 715-3118 — Fax: (860) 715-3577
E-mail: mark.e.hurtt@pfizer.com

Tonia M. Masson — Executive Director
Tel: (703) 438-3104 — Fax: (703) 438-3113
E-mail: tmasson@teratology.org

EDUCATION COMMITTEE

Eias A. Zahalka, Ph.D. — Chair
Tel: (301) 610-2180 — Fax: (301) 738-2362
E-mail: eias.zahalka@bioreliance.com

John M. Rogers, Ph.D. — Secretary
Tel: (919) 541-5177 — Fax: (919) 541-4017
E-mail: rogers.john@epa.gov

Jan M. Friedman, M.D., Ph.D. — 2010
Tel: (604) 875-2000 — Fax: (604) 875-2376
E-mail: frid@interchange.ubc.ca

Mary S. Marty, Ph.D. — 2008
Tel: (989) 636-6653 — Fax: (989) 638-9863
E-mail: MSMarty@dow.com

Tacey White, Ph.D. — 2009
Tel: (610) 270-6168 — Fax: (610) 270-7622
E-mail: tacey.e.white@gsk.com

Louise M. Winn, Ph.D. — 2010
Tel: (613) 533-6465 — Fax: (613) 533-6412
E-mail: winnl@post.queensu.ca

Christopher Lau, Ph.D. — Past Chair
Tel: (919) 541-5097 — Fax: (919) 541-4017
E-mail: lau.christopher@epa.gov

Christina D. Chambers, Ph.D., M.P.H. — Vice President
Tel: (619) 543-2082 — Fax: (619) 543-2066
E-mail: chchambers@ucsd.edu

Rocky S. Tuan, Ph.D. — *Ad Hoc*
Tel: (301) 451-6854 — Fax: (301) 402-2724
E-mail: tuanr@mail.nih.gov

Keith J. Robinson, B.Sc., D.A.B.T. — *Ad Hoc*
Tel: (514) 630-8204 — Fax: (514) 630-8230
E-mail: keith.robinson@ca.crl.com

F. CLARKE FRASER AWARD COMMITTEE

Alan M. Hoberman, Ph.D., D.A.B.T. — Chair
Tel: (215) 443-8710 — Fax: (215) 443-8587
E-mail: alan.hoberman@crl.com

Christina D. Chambers, Ph.D., M.P.H. — 2011
Tel: (619) 294-3791 — Fax: (619) 220-0228
E-mail: chchambers@ucsd.edu

Sonja A. Rasmussen, M.D. — 2012
Tel: (404) 498-3908 — Fax: (404) 498-3550
E-mail: skr9@cdc.gov

Ida M. Washington, D.V.M., Ph.D. — 2008
Tel: (206) 543-0474 — Fax: (206) 685-3006
E-mail: idaw@u.washington.edu

Deborah K. Hansen, Ph.D. — Council Liaison
Tel: (870) 543-7480
E-mail: deborah.hansen@fda.hhs.gov

Suzan L. Carmichael, Ph.D. — Past Chair
Tel: (510) 549-4155 — Fax: (510) 549-4175
E-mail: SCarmichael@marchofdimes.com

COMMITTEES (continued)

FINANCE COMMITTEE

Ida M. Washington, D.V.M., Ph.D. — Chair
Tel: (206) 543-0474 — Fax: (206) 685-3006
E-mail: idaw@u.washington.edu

John M. Rogers, Ph.D. — Past Treasurer
Tel: (919) 541-5177 — Fax: (919) 541-4017
E-mail: rogers.john@epa.gov

Christina D. Chambers, Ph.D., M.P.H. — Vice President
Tel: (619) 294-3791 — Fax: (619) 220-0228
E-mail: chchambers@ucsd.edu

Tonia M. Masson — Executive Director
Tel: (703) 438-3104 — Fax: (703) 438-3113
E-mail: tmasson@teratology.org

George P. Daston, Ph.D. — *Ad Hoc*
Tel: (513) 627-2886 — Fax: (513) 627-0323
E-mail: daston.gp@pg.com

FUTURE SITES COMMITTEE

Christina D. Chambers, Ph.D., M.P.H. — Chair
Tel: (619) 294-3791 — Fax: (619) 220-0228
E-mail: chchambers@ucsd.edu

Barbara F. Hales, Ph.D. — Vice President-elect
Tel: (514) 398-3610 — Fax: (514) 398-7120
E-mail: barbara.hales@mcgill.ca

Thomas B. Knudsen, Ph.D. — President
Tel: (919) 541-9776 — Fax: (919) 541-1194
E-mail: knudsen.thomas@epa.gov

Tonia M. Masson — Executive Director
Tel: (703) 438-3104 — Fax: (703) 438-3113
E-mail: tmasson@teratology.org

MEMBERSHIP COMMITTEE

J. Edward Fisher, Jr., Ph.D. — Chair
Tel: (301) 796-1067 — Fax: (301) 796-9839
E-mail: jedward.fisher@fda.hhs.gov

Robert M. Parker, Ph.D., D.A.B.T. — 2009
Tel: (732) 873-2550 x2389 — Fax: (732) 873-3992
E-mail: ParkerR@princeton.huntingdon.com

Barbara D. Abbott, Ph.D. — 2010
Tel: (919) 541-2753 — Fax: (919) 541-4017
E-mail: abbott.barbara@epa.gov

Michael F. O'Hara, Ph.D. — Past Chair
Tel: (862) 778-7483 — Fax: (973) 781-6339
E-mail: michael.ohara@novartis.com

Deborah K. Hansen, Ph.D. — Secretary
Tel: (870) 543-7480
E-mail: deborah.hansen@fda.hhs.gov

NOMINATIONS AND ELECTIONS COMMITTEE

Melissa Sherman Tassinari, Ph.D., D.A.B.T. — Chair
Tel: (860) 732-6033 — Fax: (860) 715-9855
E-mail: melissa.s.tassinari@pfizer.com

John M. DeSesso, Ph.D.
Tel: (703) 610-2130 — Fax: (703) 610-1702
E-mail: jdesesso@noblis.org

Claudia Kappen, Ph.D.
Tel: (225) 763-2781 — Fax: (225) 763-0260
E-mail: claudia.kappen@pbrc.edu

Robert J. Kavlock, Ph.D.
Tel: (919) 541-2326 — Fax: (919) 541-1494
E-mail: kavlock.robert@epa.gov

William Slikker, Jr., Ph.D.
Tel: (870) 543-7517 — Fax: (870) 543-7576
E-mail: william.slikker@fda.hhs.gov

Susan Makris, M.S. — Past Chair
Tel: (703) 347-8522 — Fax: (703) 347-8692
E-mail: makris.susan@epa.gov

PROGRAM COMMITTEE 2007–2008

Christina D. Chambers, Ph.D., M.P.H. — Chair
Tel: (619) 294-3791 — Fax: (619) 220-0228
E-mail: chchambers@ucsd.edu

Patricia M. Bittner, M.S. — Public Affairs Committee Chair
Tel: (301) 504-7263 — Fax: (301) 504-0137
E-mail: pbittner@cpsc.gov

Judy Buelke-Sam, M.A.
Tel: (317) 462-5033 — Fax: (317) 462-7307
E-mail: buelke19@insightBB.com

Michael D. Collins, Ph.D.
Tel: (310) 206-6730 — Fax: (310) 206-9903
E-mail: mdc@ucla.edu

George P. Daston, Ph.D.
Tel: (513) 627-2886 — Fax: (513) 627-0323
E-mail: daston.gp@pg.com

Maia L. Green
Tel: (502) 852-4129 — Fax: (502) 852-4702
E-mail: maia.green@louisville.edu

Barbara F. Hales, Ph.D. — Vice President-elect
Tel: (514) 398-3610 — Fax: (514) 398-7120
E-mail: barbara.hales@mcgill.ca

Wafa A. Harrouk, Ph.D.
Tel: (301) 796-0908 — Fax: (301) 796-9897
E-mail: wafa.harrouk@fda.hhs.gov

Lewis B. Holmes, M.D.
Tel: (617) 726-1742 — Fax: (617) 724-1911
E-mail: holmes.lewis@MGH.harvard.edu

Joseph F. Holson, Ph.D.
Tel: (419) 289-8700 — Fax: (419) 289-3650
E-mail: jfholson@wilresearch.com

Mark E. Hurtt, Ph.D. — Publications Committee Chair
Tel: (860) 715-3118 — Fax: (860) 715-3577
E-mail: mark.e.hurtt@pfizer.com

Carl L. Keen, Ph.D.
Tel: (530) 752-6331 — Fax: (530) 752-8966
E-mail: clkeen@ucdavis.edu

Mary S. Marty, Ph.D.
Tel: (989) 636-6653 — Fax: (989) 638-9863
E-mail: MSMarty@dow.com

James L. Mills, M.D.
Tel: (301) 496-5394 — Fax: (301) 402-2084
E-mail: jamesmills@nih.gov

Michael F. O'Hara, Ph.D.
Tel: (862) 778-7483 — Fax: (973) 781-6339
E-mail: michael.ohara@novartis.com

Nafeesa H. Owens
Tel: (703) 879-4586
E-mail: nhowens@gmail.com

COMMITTEES (continued)

Sonja A. Rasmussen, M.D.
Tel: (404) 498-3908 Fax: (404) 498-3550
E-mail: skr9@cdc.gov

Mary Alice Smith, Ph.D. Student Affairs Committee Chair
Tel: (706) 542-1599 Fax: (706) 542-7472
E-mail: masmith@uga.edu

Donald G. Stump, Ph.D.
Tel: (419) 289-8700 Fax: (419) 289-3650
E-mail: dstump@wilresearch.com

Janet Uriu-Adams, Ph.D.
Tel: (530) 752-4658 Fax: (530) 752-8966
E-mail: jyuriuadams@ucdavis.edu

Martha M. Werler, Sc.D.
Tel: (617) 734-6006 Fax: (617) 738-5119
E-mail: mwerler@slone.bu.edu

Katherine L. Wisner, M.D., M.S.
Tel: (412) 246-6564 Fax: (412) 246-6960
E-mail: wisnerkl@upmc.edu

Eias A. Zahalka, Ph.D. Education Committee Chair
Tel: (240) 216-4616 Fax: (301) 987-1807
E-mail: ezahalka@genelogic.com

Thomas B. Knudsen, Ph.D. President
Tel: (919) 541-9776 Fax: (919) 541-1194
E-mail: knudsen.thomas@epa.gov

Mary E. Gilbert, Ph.D. NBTS Organizer
Tel: (919) 541-4394 Fax: (919) 541-4849
E-mail: gilbert.mary@epa.gov

Sharon Voyer Lavigne, M.S. OTIS Organizer
Tel: (860) 523-6439 Fax: (860) 523-6465
E-mail: Lavigne@adp.uchc.edu

Dee L. Quinn, M.S., C.G.C. OTIS Organizer
Tel: (520) 626-4382 Fax: (520) 626-5115
E-mail: dquinn@email.arizona.edu

Thomas R. Moore, M.D. ACOG Representative
Tel: (619) 543-7900 Fax: (619) 543-3703
E-mail: trmoore@ucsd.edu

PUBLIC AFFAIRS COMMITTEE

Patricia M. Bittner, M.S. Chair
Tel: (301) 504-7263 Fax: (301) 504-0137
E-mail: pbittner@cpsc.gov

Rebecca C. Brown 2009
Tel: (703) 347-8567 Fax: (703) 347-8692
E-mail: brown.rebecca@epa.gov

Anne R. Greenlee, Ph.D. 2009
Tel: (541) 962-3389 Fax: (541) 962-3490
E-mail: greenlee@ohsu.edu

Janet R. Hardy, Ph.D. 2009
Tel: (508) 856-7541 Fax: (508) 856-3840
E-mail: janet.hardy@umassmed.edu

Stephen B. Harris, Ph.D., ATS 2010
Tel: (619) 469-7886 Fax: (619) 469-6852
E-mail: steve@sbhgrp.com

Gary L. Kimmel, Ph.D. 2010
Tel: (252) 261-8057 Fax: (252) 260-8057
E-mail: kimmel.gary@gmail.com

Cecilia A. Lyons Gaffaney, M.D. 2008
Tel: (408) 371-7111 Fax: (408) 371-8111
E-mail: cksapphire@aol.com

Richard K. Miller, Ph.D. 2010
Tel: (585) 275-2520 Fax: (585) 576-5721
E-mail: RichardK_Miller@URMC.Rochester.edu

James L. Mills, M.D. 2010
Tel: (301) 496-5394 Fax: (301) 402-2084
E-mail: jamesmills@nih.gov

Sonja A. Rasmussen, M.D. 2010
Tel: (404) 498-3908 Fax: (404) 498-3550
E-mail: skr9@cdc.gov

Michael D. Shelby, Ph.D. 2009
Tel: (919) 541-3455 Fax: (919) 316-4511
E-mail: shelby@niehs.nih.gov

Dana L. Shuey, Ph.D., D.A.B.T. 2008
Tel: (610) 558-9800 Fax: (610) 387-4094
E-mail: shuey.dana@endo.com

Chris J. Stodgell, Ph.D. 2010
Tel: (585) 275-1902
E-mail: chris_stodgell@urmc.rochester.edu

Tacey White, Ph.D. 2009
Tel: (610) 270-6168 Fax: (610) 270-7622
E-mail: tacey.e.white@gsk.com

Janine E. Polifka, Ph.D. Past Chair
Tel: (206) 543-2465 Fax: (206) 543-7921
E-mail: polifka@u.washington.edu

PUBLICATIONS COMMITTEE

Mark E. Hurtt, Ph.D. Chair
Tel: (860) 715-3118 Fax: (860) 715-3577
E-mail: mark.e.hurtt@pfizer.com

Elaine Z. Francis, Ph.D. Vice Chair
Tel: (202) 343-9696 Fax: (202) 233-0681
E-mail: francis.elaine@epa.gov

Karen A. Augustine, Ph.D. 2009
Tel: (609) 818-3406 Fax: (732) 227-3982
E-mail: karen.augustine@bms.com

Wafa A. Harrouk, Ph.D. 2008
Tel: (301) 796-0908 Fax: (301) 796-9897
E-mail: wafa.harrouk@fda.hhs.gov

Michael G. Narotsky, Ph.D. 2010
Tel: (919) 541-0591 Fax: (919) 541-4017
E-mail: narotsky.michael@epa.gov

Michael A. Schellpfeffer, M.D. 2010
Tel: (262) 658-2133 Fax: (262) 658-2699
E-mail: maschellpfeffer@gmail.com

Janet Uriu-Adams, Ph.D. 2010
Tel: (530) 752-4658 Fax: (530) 752-8966
E-mail: jyuriuadams@ucdavis.edu

Michael D. Collins, Ph.D. Past Chair
Tel: (310) 206-6730 Fax: (310) 206-9903
E-mail: mdc@ucla.edu

Thomas B. Knudsen, Ph.D. President
Tel: (919) 541-9776 Fax: (919) 541-1194
E-mail: knudsen.thomas@epa.gov

Colette E. Bean Wiley Representative
Tel: (201) 748-6297 Fax: (201) 748-5931
E-mail: cbean@wiley.com

Michael Weston Wiley Representative
Tel: (201) 748-6896 Fax: (201) 748-6142
E-mail: bbitetto@wiley.com

COMMITTEES (continued)

Diana M. Juriloff, Ph.D. — *BDRA* Editor
Tel: (604) 822-5786 — Fax: (604) 822-5348
E-mail: juriloff@interchange.ubc.ca

George P. Daston, Ph.D. — *BDRB* Editor
Tel: (513) 627-2886 — Fax: (513) 627-0323
E-mail: daston.gp@pg.com

Rocky S. Tuan, Ph.D. — *BDRC* Editor
Tel: (301) 451-6854 — Fax: (301) 402-2724
E-mail: tuanr@mail.nih.gov

SCIENTIFIC DIVERSITY COMMITTEE *(AD HOC)*

Kenneth Lyons Jones, M.D. — Chair
Tel: (619) 294-6460 — Fax: (619) 220-0228
E-mail: klyons@ucsd.edu

Jane Adams, Ph.D.
Tel: (617) 287-6346 — Fax: (617) 287-6336
E-mail: jane.adams@umb.edu

Rebecca C. Brown
Tel: (703) 347-8567 — Fax: (703) 347-8692
E-mail: brown.rebecca@epa.gov

Christina D. Chambers, Ph.D., M.P.H.
Tel: (619) 294-3791 — Fax: (619) 220-0228
E-mail: chchambers@ucsd.edu

Adolfo Correa-Villasenor, M.D., Ph.D.
Tel: (404) 498-3811 — Fax: (404) 498-3040
E-mail: acorrea@cdc.gov

Elaine M. Faustman, Ph.D.
Tel: (206) 685-2269 — Fax: (206) 685-4696
E-mail: faustman@u.washington.edu

Wafa A. Harrouk, Ph.D.
Tel: (301) 796-0908 — Fax: (301) 796-9897
E-mail: wafa.harrouk@fda.hhs.gov

Kok-Wah Hew, Ph.D.
Tel: (224) 554-5379 — Fax: (224) 554-7848
E-mail: khew@tgrd.com

Bruce J. Kelman, Ph.D., D.A.B.T.
Tel: (425) 556-5555 — Fax: (425) 556-5556
E-mail: bkelman@veritox.com

Thomas B. Knudsen, Ph.D.
Tel: (919) 541-9776 — Fax: (919) 541-1194
E-mail: knudsen.thomas@epa.gov

Offie P. Soldin, Ph.D.
Tel: (202) 687-4717 — Fax: (301) 229-5285
E-mail: OS35@georgetown.edu

Melissa Sherman Tassinari, Ph.D., D.A.B.T.
Tel: (860) 732-6033 — Fax: (860) 715-9855
E-mail: melissa.s.tassinari@pfizer.com

Rochelle W. Tyl, Ph.D., D.A.B.T.
Tel: (919) 541-5972 — Fax: (919) 541-5956
E-mail: rwt@rti.org

Judith A. Wubah, Ph.D.
Tel: (352) 273-6134 — Fax: (352) 846-1248
E-mail: jawubah@ufl.edu

STUDENT AFFAIRS COMMITTEE

Mary Alice Smith, Ph.D. — Chair
Tel: (706) 542-1599 — Fax: (706) 542-7472
E-mail: masmith@uga.edu

Michael D. Collins, Ph.D. — 2009
Tel: (310) 206-6730 — Fax: (310) 206-9903
E-mail: mdc@ucla.edu

Meredith S. Rocca, Ph.D. — 2010
Tel: (805) 313-4612
E-mail: mrocca@amgen.com

Gary M. Shaw, Ph.D. — Past Chair
Tel: (510) 597-7043 — Fax: (510) 450-5812
E-mail: gshaw@marchofdimes.com

Christina D. Chambers, Ph.D., M.P.H. — Vice President
Tel: (619) 294-3791 — Fax: (619) 220-0228
E-mail: chchambers@ucsd.edu

WEB SITE COMMITTEE

Amar V. Singh — Chair
Tel: (919) 541-9772
E-mail: singhamarv@gmail.com

Anthony M. DeLise, Ph.D. — 2009
Tel: (908) 231-5937 — Fax: (908) 231-2629
E-mail: anthony.delise@sanofi-aventis.com

Julia M. Gohlke — 2010
Tel: (919) 541-2271
E-mail: gohlkej@niehs.nih.gov

Ronald D. Hood, Ph.D., ATS — 2011
Tel: (205) 339-9460
E-mail: rhood@as.ua.edu

Robert Felix — Past Chair
Tel: (619) 543-2128 — Fax: (619) 543-2066
E-mail: rfelix@ucsd.edu

Edward W. Carney, Ph.D. — Council Liaison
Tel: (989) 636-2580 — Fax: (989) 638-9863
E-mail: ecarney@dow.com

Marianne Barrier, Ph.D. — *Ad Hoc*
Tel: (919) 541-7712 — Fax: (919) 541-4017
E-mail: barrier.marianne@epa.gov

Eugene Galdones — *Ad Hoc*
Tel: (514) 398-3634 — Fax: (514) 398-7120
E-mail: eugene.galdones@mcgill.ca

Elizabeth Ann Irvin — *Ad Hoc*
Tel: (706) 206-3175 — Fax: (706) 542-7472
E-mail: eairvin@uga.edu

Francis Obuseh — *Ad Hoc*
Tel: (678) 849-7087
E-mail: obuseh@uab.edu

Julia Perstin — *Ad Hoc*
Tel: (416) 978-5061 — Fax: (416) 978-8511
E-mail: julia.perstin@utoronto.ca

COMMITTEES (continued)

STRATEGIC PLANNING WORKING GROUP OVERSIGHT COMMITTEE

Melissa Sherman Tassinari, Ph.D., D.A.B.T. — Chair
Tel: (860) 732-6033 — Fax: (860) 715-9855
E-mail: melissa.s.tassinari@pfizer.com

Christina D. Chambers, Ph.D., M.P.H.
Tel: (619) 294-3791 — Fax: (619) 220-0228
E-mail: chchambers@ucsd.edu

Elaine M. Faustman, Ph.D.
Tel: (206) 685-2269 — Fax: (206) 685-4696
E-mail: faustman@u.washington.edu

Barbara F. Hales, Ph.D.
Tel: (514) 398-3610 — Fax: (514) 398-7120
E-mail: barbara.hales@mcgill.ca

ANNUAL MEETING WORKING GROUP

Christina D. Chambers, Ph.D., M.P.H. — Co-Leader
Tel: (619) 294-3791 — Fax: (619) 220-0228
E-mail: chchambers@ucsd.edu

Sonja A. Rasmussen, M.D. — Co-Leader
Tel: (404) 498-3908 — Fax: (404) 498-3550
E-mail: skr9@cdc.gov

Melissa J. Beck, Ph.D.
Tel: (419) 289-8700 — Fax: (419) 289-3650
E-mail: mbeck@wilresearch.com

Judy Buelke-Sam, M.A.
Tel: (317) 462-5033 — Fax: (317) 462-7307
E-mail: buelke19@insightBB.com

Karen Filkins, M.D.
Tel: (310) 748-2681
E-mail: kfilkins@comcast.net

Julia M. Gohlke
Tel: (919) 541-2271
E-mail: gohlkej@niehs.nih.gov

Poorni R. Iyer, D.V.M., Ph.D.
Tel: (916) 323-5646 — Fax: (916) 327-7340
E-mail: piyer@oehha.ca.gov

Linda G. Roberts, Ph.D.
Tel: (510) 242-9336 — Fax: (510) 242-9354
E-mail: lroberts@chevron.com

Dana L. Shuey, Ph.D., D.A.B.T.
Tel: (610) 558-9800 — Fax: (610) 387-4094
E-mail: shuey.dana@endo.com

COMMUNICATIONS WORKING GROUP

Edward W. Carney, Ph.D. — Co-Leader
Tel: (989) 636-2580 — Fax: (989) 638-9863
E-mail: ecarney@dow.com

George P. Daston, Ph.D. — Co-Leader
Tel: (513) 627-2886 — Fax: (513) 627-0323
E-mail: daston.gp@pg.com

Marianne Barrier, Ph.D.
Tel: (919) 541-7712 — Fax: (919) 541-4017
E-mail: barrier.marianne@epa.gov

Amar V. Singh
Tel: (919) 541-9772 — Fax: (501) 643-8860
E-mail: singhamarv@gmail.com

Shigehito Yamada, M.D., Ph.D.
Tel: (301) 451-8823
E-mail: shyamada@mac.com

MEMBERSHIP WORKING GROUP

Barbara D. Abbott, Ph.D. — Co-Leader
Tel: (919) 541-2753 — Fax: (919) 541-4017
E-mail: abbott.barbara@epa.gov

Kok-Wah Hew, Ph.D. — Co-Leader
Tel: (224) 554-5379 — Fax: (224) 554-7848
E-mail: khew@tgrd.com

Harpal S. Buttar, D.V.M., Ph.D.
Tel: (613) 941-2118 — Fax: (613) 941-1365
E-mail: harpal_buttar@hc-sc.gc.ca

Thomas F.X. Collins, Ph.D.
Tel: (301) 951-8617
E-mail: Elncllns@aol.com

Robert G. Ellis-Hutchings, Ph.D.
Tel: (919) 541-0852 — Fax: (919) 541-4017
E-mail: ellis-hutchings.robert@epa.gov

Maia L. Green
Tel: (502) 852-4129 — Fax: (502) 852-4702
E-mail: maia.green@louisville.edu

Susan Henwood, M.S., D.A.B.T.
Tel: (608) 241-7221 — Fax: (608) 242-2736
E-mail: susan.henwood@covance.com

Gary L. Kimmel, Ph.D.
Tel: (252) 261-8057 — Fax: (252) 260-8057
E-mail: kimmel.gary@gmail.com

Debra L. Kirchner, Ph.D., D.A.B.T.
Tel: (608) 242-2638 — Fax: (608) 242-7971
E-mail: debra.kirchner@covance.com

Philip E. Mirkes, Ph.D.
Tel: (979) 458-0562
E-mail: pmirkes@cvm.tamu.edu

Joshua F. Robinson
Tel: (206) 685-2270 — Fax: (206) 685-4696
E-mail: jfr@u.washington.edu

James L. Schardein, M.S., ATS
Tel: (734) 475-1577 — Fax: (734) 475-1645
E-mail: j42734@aol.com

Donald G. Stump, Ph.D.
Tel: (419) 289-8700 — Fax: (419) 289-3650
E-mail: dstump@wilresearch.com

Ida M. Washington, D.V.M., Ph.D.
Tel: (206) 543-0474 — Fax: (206) 685-3006
E-mail: idaw@u.washington.edu

SHARED SCIENTIFIC IDENTITY WORKING GROUP

Elaine M. Faustman, Ph.D. — Co-Leader
Tel: (206) 685-2269 — Fax: (206) 685-4696
E-mail: faustman@u.washington.edu

Rochelle W. Tyl, Ph.D., D.A.B.T. — Co-Leader
Tel: (919) 541-5972 — Fax: (919) 541-5956
E-mail: rwt@rti.org

Patricia M. Bittner, M.S.
Tel: (301) 504-7263 — Fax: (301) 504-0137
E-mail: pbittner@cpsc.gov

COMMITTEES (continued)

Michael D. Collins, Ph.D.
Tel: (310) 206-6730 Fax: (310) 206-9903
E-mail: mdc@ucla.edu

Barbara F. Hales, Ph.D.
Tel: (514) 398-3610 Fax: (514) 398-7120
E-mail: barbara.hales@mcgill.ca

Poorni R. Iyer, D.V.M., Ph.D.
Tel: (916) 323-5646 Fax: (916) 327-7340
E-mail: piyer@oehha.ca.gov

Kenneth Lyons Jones, M.D.
Tel: (619) 543-2040 Fax: (619) 543-2066
E-mail: klyons@ucsd.edu

Claudia Kappen, Ph.D.
Tel: (225) 763-2781 Fax: (225) 763-0260
E-mail: claudia.Kappen@pbrc.edu

Thomas B. Knudsen, Ph.D.
Tel: (919) 541-9776 Fax: (919) 541-1194
E-mail: knudsen.thomas@epa.gov

J. Christopher States, Ph.D.
Tel: (502) 852-5347 Fax: (502) 852-2492
E-mail: jcstates@louisville.edu

Peter G. Wells, Pharm.D.
Tel: (416) 978-3221 Fax: (416) 267-7797
E-mail: pg.wells@utoronto.ca

VISIBILITY WORKING GROUP

Janine E. Polifka, Ph.D. Co-Leader
Tel: (206) 543-2465 Fax: (206) 543-7921
E-mail: polifka@u.washington.edu

Melissa Sherman Tassinari, Ph.D., D.A.B.T. Co-Leader
Tel: (860) 732-6033 Fax: (860) 715-9855
E-mail: melissa.s.tassinari@pfizer.com

Elaine Z. Francis, Ph.D.
Tel: (202) 343-9696 Fax: (202) 233-0681
E-mail: francis.elaine@epa.gov

Deborah K. Hansen, Ph.D.
Tel: (870) 543-7480
E-mail: deborah.hansen@fda.hhs.gov

Wafa A. Harrouk, Ph.D.
Tel: (301) 796-0908 Fax: (301) 796-9897
E-mail: wafa.harrouk@fda.hhs.gov

Robert J. Kavlock, Ph.D.
Tel: (919) 541-2326 Fax: (919) 541-1194
E-mail: kavlock.robert@epa.gov

Carole A. Kimmel, Ph.D.
Tel: (252) 261-8057 Fax: (252) 261-8057
E-mail: kimmel.carole@gmail.com

Richard K. Miller, Ph.D.
Tel: (585) 275-2520 Fax: (585) 576-5721
E-mail: RichardK_Miller@URMC.Rochester.edu

Michael F. O'Hara, Ph.D.
Tel: (862) 778-7483 Fax: (973) 781-6339
E-mail: michael.ohara@novartis.com

Linda G. Roberts, Ph.D.
Tel: (510) 242-9336 Fax: (510) 242-9354
E-mail: lroberts@chevron.com

Lakshmi Sivaraman, Ph.D
Tel: (860) 686-9338 Fax: (860) 715-3577
E-mail: lakshmi.sivaraman@pfizer.com

Mary Alice Smith, Ph.D.
Tel: (706) 542-1599 Fax: (706) 542-7472
E-mail: masmith@uga.edu

Carmen C. Umpierre, Ph.D.
Tel: (787) 738-2161 Fax: (787) 263-6426
E-mail: cumpierre@cayey.upr.edu

Eias A. Zahalka, Ph.D., MBA
Tel: (301) 610-2180 Fax: (301) 738-2362
E-mail: eias.zahalka@bioreliance.com

2008 Sustaining Members

(as of April 4, 2008)

Platinum

Charles River

GlaxoSmithKline

Merck Research Laboratories

Pfizer Inc.

WIL Research Laboratories, LLC

Gold

Abbott Laboratories

AstraZeneca

The J&J Pharma R&D Companies

Novartis Pharmaceuticals Corporation

Schering-Plough Research

Silver

American Petroleum Institute

Chevron Research & Technology

DuPont Haskell Global Centers
for Health and Environmental Sciences

Eli Lilly and Company

2008 Annual Meeting Sponsors

(as of April 4, 2008)

The Teratology Society thanks the following Sponsors

Platinum

Amgen Inc.
Centers for Disease Control
Charles River
ILSI Health and Environmental Sciences DART Technical Committee
John Wiley and Sons
March of Dimes Birth Defects Foundation
Merck Research Laboratories
Pfizer Inc.
WIL Research Laboratories, LLC

Gold

Celgene Corporation
Middle Atlantic Reproductive and Teratology Association (MARTA)
Midwest Teratology Association (MTA)
Sanofi Pasteur

Silver

Abbott Laboratories
DuPont Haskell Global Centers for Health and Environmental Sciences
Eli Lilly and Company
Endo Pharmaceuticals, Inc.
GlaxoSmithKline
Hoffman-La Roche Inc.
MPI Research
Numira Bioscience
Wyeth Research

Contributor

Calvert Laboratories, Inc.
International Society for Pharmacoepidemiology
Society of Toxicology

General Information

Registration

The Teratology Society Annual Meeting registration is located in the Regency Foyer.

Hours: Friday, 3:00 PM–5:00 PM
Saturday, 7:00 AM–6:00 PM
Sunday, 8:00 AM–7:00 PM
Monday, 7:30 AM–6:00 PM
Tuesday, 7:00 AM–5:00 PM
Wednesday, 7:30 AM–2:00 PM

Stay Connected While You Travel

The Teratology Society appreciates how important is it for attendees to stay connected to daily responsibilities while attending the meeting. There will be an Internet Café in the registration area for Teratology Society Annual Meeting attendees. The Internet Café will be open during registration hours.

Welcoming Reception

The Welcoming Reception will be held in the Monterey Grand Ballroom on Sunday, June 29 at 6:00 PM. The reception is open to registered attendees of the Teratology Society and Neurobehavioral Teratology Society (NBTS) Annual Meetings.

The Hyatt Regency Monterey offers High-Speed Wireless Internet Access in their guest rooms for $9.99 per 24 hour logon time. They also offer T-Mobil Hotspot Wireless Broadband in the public areas. In order to get the T-Mobil Wireless Internet in the public areas, attendees must have a T-Mobil phone with Internet capabilities. For all other guests, wireless Internet in the public areas is $9.99 per 24-hour logon time.

Poster Sessions

The Poster Sessions will be held in the Monterey Ballroom on Monday, June 30 and Tuesday, July 1. The Monterey Ballroom is adjacent to the Knuckles Sports Bar, located near the hotel lobby.

The poster presenters for the Monday session should have their posters on display prior to 12:30 PM. The posters will be available for viewing at 12:30 PM. The presenters will be available for discussion from 5:30 PM–7:30 PM. Posters in this session should be removed at 7:30 PM. Removal of the posters is the responsibility of the presenter.

The poster presenters for the Tuesday session should have their posters on display prior 8:00 AM. The presenters will be available for discussion from 11:45 AM–1:30 PM. Posters in this session should be removed at 1:30 PM. Removal of the posters is the responsibility of the presenter.

Banquet and Travel Awards

The Banquet will be held in the Monterey Grand Ballroom on Wednesday, July 2. The reception (no host bar) will begin at 6:30 PM on the Monterey Terrace. Dinner will be served at 7:30 PM. During the banquet the Teratology Society Awards will be presented. These awards include the Travel Awards, Eli Lilly Women and Minority Travel Award, James C. Bradford Memorial Student Poster Award, Wilson Presentation Awards, and the Marie Taubeneck Award. Banquet Tickets are required for this event. The tickets are included in your registration materials and are not transferable. Guest tickets can be purchased at the registration desk. Be sure to wear your dancing shoes.

Teratology Society XXVII Annual Volleyball Game

Come one, come all and join in the fun! The 27th Annual Volleyball Game will be held Saturday, June 28 at 12:15 PM–1:30 PM. This is an event that you will not want to miss. It is anticipated that a challenge will be issued by the "seasoned players" to the student and postdoctoral attendees on the court.

Stop by the registration desk for more information on how to participate in this match—it is free and open to all attendees.

Student Activities

Special events for students and postdocs will occur throughout the Teratology Society meeting. These events were planned with you in mind and allow you to meet other students and scientists in our field. The following special events are scheduled.

Saturday Mixer—get to know your fellow student and postdoc attendees before the start of the Annual Meeting. Students and postdocs will receive a coupon with their registration materials. Join student and postdoc attendees in the Knuckles Sports Bar at the Hyatt Regency Monterey at 5:30 PM. Student and postdoc attendees should gather in groups of 6–8 to redeem their coupons for a free drink and

an appetizer for the group to share. You must have a group of at least 6 student/postdoc attendees to take advantage of the coupon. Coupons are good for Saturday evening only.

Dine with a Teratology Ambassador—Students and postdoc attendees who signed up in advance will meet with experienced members of the Society for lunch or dinner in a small group setting. The final schedule is available at the registration desk.

MARTA/MTA Student Career Event

Please be our guest for dinner, conversation, and networking at a Student Career Event on Monday, June 30, from 7:30 PM–9:30 PM. This popular annual event, hosted by the Middle Atlantic Reproduction and Teratology Association (MARTA) and Midwest Teratology Association (MTA), is for students and postdocs attending the joint annual meetings of the Teratology Society, NBTS, and OTIS. As you prepare for the next phase in your professional career, we offer you this opportunity to meet your fellow students and postdocs and to interact with scientists from academia, government, and industry. This is also an opportunity for you to discuss your future and the various career paths available to you. This event has been overwhelmingly well received in the past and we hope to see you there.

Award/Lectures

Narsingh Agnish Fellowship

This award recognizes Narsingh Agnish's contributions to the Teratology Society, and particularly the implementation of the Education Course. The Narsingh Agnish Fellowship facilitates the continuing participation of senior Teratology Society members at the Annual Meeting. This year's fellow is **Devendra M. Kochhar**, who will present during the Education Course on Saturday, June 28 at 8:15 AM.

Robert L. Brent Lecture

This award recognizes Dr. Brent's contributions to the Teratology Society, and particularly to the implementation of the "Teratogen Update." The purpose of the Robert L. Brent Lecture is to facilitate the discussion of new and old teratogens during the Annual Meeting. The 2008 recipient of this award is **Jan M. Friedman**, who will present on Monday, June 30 at 1:00 PM.

F. Clarke Fraser Award

This award honors F. Clarke Fraser, one of the founding members of the Teratology Society, for his many contributions to the field of developmental toxicology. This year's recipient is **Terence R. S. Ozolins** who will present on Sunday, June 29 at 12:30 PM.

Josef Warkany Lecturer

This award recognizes Josef Warkany's contributions to the Teratology Society. Dr. Warkany was the first person to demonstrate that exposures to environmental chemicals are responsible for production of congenital malformation. His early studies culminated in the formulation of the scientific principles of teratology. This award recognizes a scientist who has significantly contributed to the field of teratology over his/her career. This year's lecture will be presented by **Richard H. Finnell**, on Sunday, June 29 at 8:45 AM.

James G. Wilson Publication Award

This annual award is presented in recognition of the best paper accepted or published in the journal *Birth Defects Research*. The dual purpose of the award is to provide recognition to the authors of the best paper and to encourage authors trained in various disciplines to submit high quality papers to *Birth Defects Research*. The paper selected for this year's award is *Altered Localization of Gene Expression in Both Ectoderm and Mesoderm is Associated with a Murine Strain Difference in Retinoic Acid-Induced Forelimb Ectrodactyly*. **Hirohito Shimizu** will present the data on Sunday, June 29 at 2:00 PM.

Photography and Recording Policy

Photography, video, and/or audio recording of scientific presentations is prohibited without advance specific consent of the presenter(s)/author(s). Session Chairs are asked to strictly enforce this policy and individuals who do not comply will be asked to leave the session. In addition, cameras and recording devices are prohibited in the Exhibit Hall.

Teratology Society Annual Meeting registrants grant the Teratology Society permission to reproduce, copy, and publish photographs taken at the Annual Meeting unless written notification by the registrant, stating otherwise, is submitted to the Teratology Society headquarters office prior to the Annual Meeting or while registering on-site.

Hyatt Regency Monterey Services

The hotel has a full service business center—open 24-hours to hotel guests, full service concierge, in-room dining, self service laundry and dry cleaning services, gift shop, and a complimentary modern fitness center which offers 24-hours access to hotel guests.

First Aid and Security

The Hyatt Regency Monterey has house phones located throughout the hotel for use in case of an emergency. If you need medical or security assistance, you can pick-up any house phone and you will be connected to the hotel operator who will be able to assist you.

Hotel Map

To assist you in locating the hotel registration desk, meeting rooms and Exhibit Hall there are maps of the Hyatt Regency Monterey located on the following page.

Continuing Medical Education (CME)

CME Credits

The Teratology Society is offering CME credits to clinicians and trainees for many of the scientific sessions held during the 48th Annual Meeting. This new opportunity will help to broaden the audience at our scientific sessions, while enhancing the professional development of clinicians who integrate the outcome of the research into everyday practice.

Daily Breakdown on CME Credits

The following is the daily breakdown of credits available. Each attendee is responsible for claiming credit commensurate with the extent of your participation in the scientific activities.

Saturday, June 28: 6 credits
Sunday, June 29: 4 credits
Monday, June 30: 7 credits
Tuesday, July 1: 10 credits
Wednesday, July 2: 7 credits

Required Daily Sign-In Sheets

Teratology Society Annual Meeting attendees who wish to receive CME credits are responsible for signing the daily attendance sheets. The sign-in sheets will be located at the registration desk during registration hours. ACOG members must provide their ACOG membership number on the daily attendance sheets.

CME Certificates of Participation

Certificates of CME participation, based on the daily sign-in sheets, will be available at the registration desk. Attendees are required to state the number of CME credits they are claiming and sign the certificate prior to departure. Certificates will be issued until 2:00 PM on Wednesday, July 2. Certification of continuing medical education credits is the responsibility of the attendee.

ACCME Accreditation

This activity has been planned and implemented in accordance with the Essential Areas and Policies of the Accreditation Council for Continuing Medical Education (ACCME) through the joint sponsorship of The American College of Obstetricians and Gynecologists (ACOG) and the Teratology Society.

AMA PRA Category 1 Credit(s)™ and ACOG Cognate Credit(s)

The American College of Obstetricians and Gynecologists (ACOG) designates this educational activity for a maximum of 34 AMA PRA Category 1 Credits™ or up to a maximum of 34 Category 1 ACOG Cognate Credits. Physicians should only claim credit commensurate with the extent of their participation in the activity.

Disclosure of Faculty and Industry Relationships

In accordance with ACOG policy, all faculty members have signed a conflict of interest statement in which they have disclosed any significant financial interests or other relationships with industry relative to topics they will discuss at this program. At the beginning of the program, faculty members are expected to disclose any such information to participants. Such disclosure allows you to evaluate better the objectivity of the information presented in lectures. Please report on your evaluation form any undisclosed conflict of interest you perceive.

Hyatt Regency Monterey Map

EXHIBITS AND POSTERS
MONTEREY GRAND BALLROOM
MAIN BUILDING

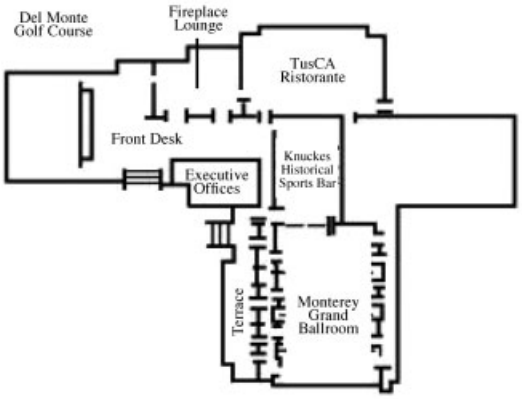

COMMITTEE MEETINGS
FIRST FLOOR—CONFERENCE CENTER

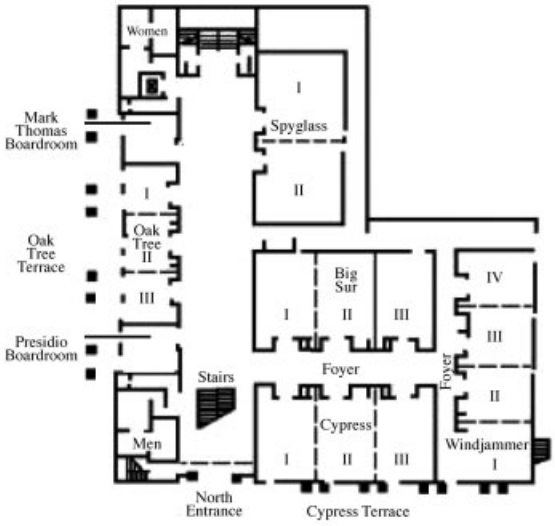

SCIENTIFIC SESSIONS
SECOND FLOOR—CONFERENCE CENTER

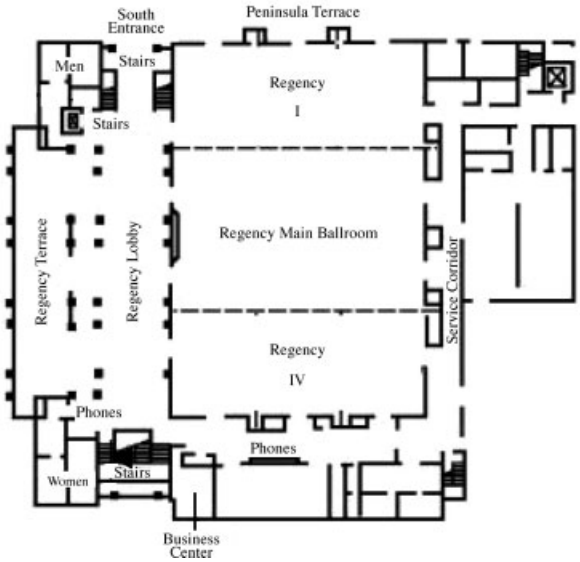

Program Agenda

FRIDAY, JUNE 27, 2008

3:00 PM–5:00 PM	**REGISTRATION—Regency Foyer**

SATURDAY, JUNE 28, 2008

7:00 AM–6:00 PM	**REGISTRATION—Regency Foyer**
7:30 AM–8:00 AM	**EDUCATION COURSE BREAKFAST—Regency Main Ballroom**
8:00 AM–5:15 PM	**EDUCATION COURSE** *(Separate registration required)***—Regency Main Ballroom** **CNS Functional Teratology** *Organized by the Education Committee: Eias A. Zahalka, Chairperson*

8:00 AM–8:10 AM	**Welcome** *Thomas B. Knudsen, Teratology Society President*
8:10 AM–8:15 AM	**Introduction** *Speaker: Eias A. Zahalka, Education Committee, Chairperson*
8:15 AM–8:30 AM	**Narsingh Agnish Fellowship** *Speaker: Devendra M. Kochhar*
	Session I
8:30 AM–9:15 AM	**Epidemiology of Functional CNS Deficits** *Speaker: David C. Bellinger, Children's Hospital/Harvard Medical School*
9:15 AM–10:00 AM	**Prenatal CNS Development** *Speaker: Barbara Clancy, University of Central Arkansas*
10:00 AM–10:15 AM	**Break**
10:15 AM–11:00 AM	**Postnatal CNS Development** *Speaker: Stanley Barone, Jr., National Center for Environmental Assessment, U.S. Environmental Protection Agency*
11:00 AM–11:45 AM	**The Relationship Between Structure and Function** *Speaker: Charles V. Vorhees, Cincinnati Children's Research Foundation*

11:45 AM–2:00 PM	**LUNCH ON OWN**
12:15 PM–1:30 PM	**TERATOLOGY SOCIETY XXXII ANNUAL VOLLEYBALL GAME**

EDUCATION COURSE (*continued*)

Session II

2:00 PM–2:45 PM	**Endocrine Effects on the Developing CNS** *Speaker: R. Thomas Zoeller, University of Massachusetts*
2:45 PM–3:30 PM	**Measuring Function in Animal Studies and the Clinic** *Speaker: Merle Paule, National Center for Toxicological Research*
3:30 PM–3:45 PM	**Break**
3:45 PM–4:30 PM	**Mitigation: The Range of Approaches to Early Postnatal Intervention** *Speaker: Claire D. Coles, Emory University*
4:30 PM–5:15 PM	**Clinical Relevance: Retinoic Acid as a Model Teratogen** *Speaker: Jane Adams, University of Massachusetts*

3:00 PM–6:30 PM **COUNCIL 1A MEETING—Spyglass 2**

6:30 PM–9:30 PM **COUNCIL 1B MEETING AND COMMITTEE REPORTS—Spyglass 2**

SUNDAY, JUNE 29, 2008

7:30 AM–8:15 AM **FINANCE COMMITTEE MEETING—Spyglass 2**

7:00 AM–8:00 AM ***BDRB* EDITORIAL BOARD MEETING—Cypress 3**

8:00 AM–7:00 PM **REGISTRATION—Regency Foyer**

8:00 AM–8:30 AM **COFFEE AND CONTINENTAL BREAKFAST—Regency Foyer**

8:30 AM–8:45 AM **PRESIDENT'S WELCOME—Regency Main Ballroom**

8:45 AM–9:45 AM **JOSEF WARKANY LECTURE—Regency Main Ballroom**
Speaker: Richard H. Finnell, Institute of Biosciences and Teratology, Texas A&M Health Science Center

9:45 AM–10:00 AM **BREAK**

10:00 AM–12:30 PM **STUDENT/POSTDOCTORAL FELLOW PLATFORM SESSION I—Regency Main Ballroom**
Organized by the Student Affairs Committee

Chairpersons: Mary Alice Smith, University of Georgia and Michael D. Collins, UCLA School of Public Health

10:00 AM–10:15 AM		**Introduction**
10:15 AM–10:30 AM	**1**	**Is GAPDH a Sensitive Target for the Teratogen-Induced Oxidative Stress That Occurs Selectively in the Caudal Region of Organogenesis Stage Embryos?** *Yan J, Hales BF. McGill University, Montreal, QC, Canada.*
10:30 AM–10:45 AM	**2**	**Prenatal Origins of Hypertension Induced by Gestational Undernutrition or Environmental Chemical Exposure** *Ellis-Hutchings RG, Zucker RM, Lau CS, Grey BE, Rogers JM. Reproductive Toxicology Division, NHEERL, ORD, US EPA, Research Triangle Park, NC, United States.*
10:45 AM–11:00 AM	**3**	**Examination of Dose and Time Dependent Arsenic and Cadmium-Induced Gene Expression Response in C57BL/6 Mouse Embryos Undergoing Neurulation** *Robinson JF, Yu X, Hong S, Faustman EM. University of Washington, Seattle, WA, United States.*

11:00 AM–11:15 AM **4** **Glyceryl Trinitrate (GTN): A Model Compound for Investigating the Mechanism of Nitro Based Developmental Toxicity**
Bardai GK[1,2], Hales BF[2], Sunahara GI[1]. [1]National Research Council of Canada, Montreal, QC, Canada, [2]McGill University, Montreal, QC, Canada.

11:15 AM–11:30 AM **5** **Gestational High Saturated Fat Diet Alters C57BL/6 Mouse Skeletal Formation**
Liang C[1], Oest ME[1], Jones JC[1], Prater MR[2]. [1]Virginia Polytechnic Institute and State University, Blacksburg, VA, United States, [2]The Edward Via Virginia College of Osteopathic Medicine, Blacksburg, VA, United States.

11:30 AM–11:45 AM **6** **Gene and miRNA Expression Differences in p53-Deficient Day-9 Mouse Embryos**
Hosako H[1], Martin GS[1], Barrier M[2], Mirkes PE[1]. [1]Texas A&M University, College Station, TX, United States, [2]U.S. Environmental Protection Agency, Research Triangle Park, NC, United States.

11:45 AM–12:00 NOON **7** **Maternal and Fetal Tissue Infectivity Following an Oral Challenge With *Listeria monocytogenes* and an Anti-internalin Peptide in Pregnant Guinea Pigs**
Williams D[1], Irvin EA[1], Puckett AM[2], Raybourne RB[4], Smith MA[1,3]. [1]Environmental Health Science Department, University of Georgia, Athens, GA, United States, [2]College of Veterinary Medicine, University of Georgia, Athens, GA, United States, [3]Center for Food Safety, University of Georgia, Athens, GA, United States, [4]Center for Food Safety and Applied Nutrition, U.S. Food and Drug Administration, Laurel, MD, United States.

12:00 NOON–12:15 PM **8** **Localized Application of Growth Differentiation Factor-10 (Gdf10) Alters Morphogenesis of the Developing Limb Bud *In Vitro***
Galdones E, Hales BF. Department of Pharmacology and Therapeutics, McGill University, Montreal, QC, Canada.

12:15 PM–12:30 PM **9** **Genetic Susceptibility to PCB-Induced Developmental Neurotoxicity**
Curran CP[1,2], Williams MT[3], Vorhees CV[3], Patel KV[2], Nebert DW[2]. [1]CDC-NIOSH, Cincinnati, OH, United States, [2]University of Cincinnati, Cincinnati, OH, United States, [3]Cincinnati Children's Research Foundation, Cincinnati, OH, United States.

12:30 PM–1:00 PM **F. CLARKE FRASER AWARD—Regency Main Ballroom**
If I Knew What I was Doing It Wouldn't Be Called Research
Speaker: Terence R. S. Ozolins, Pfizer, Inc.

1:00 PM–2:00 PM **LUNCH ON OWN**

1:00 PM–2:00 PM **EDUCATION COMMITTEE MEETING—Spyglass 2**

2:00 PM–2:30 PM **JAMES G. WILSON PUBLICATION AWARD—Regency Main Ballroom**
Altered Localization of Gene Expression in Both Ectoderm and Mesoderm is Associated with a Murine Strain Difference in Retinoic Acid-Induced Forelimb Ectrodactyly
Speaker: Hirohito Shimizu, University of California, Los Angeles

2:30 PM–6:00 PM **MARCH OF DIMES SYMPOSIUM—Regency Main Ballroom**
Embryonic and Fetal Hypoxia
Chairpersons: Michael D. Collins, UCLA School of Public Health and William S. Webster, University of Sydney

2:30 PM–2:35 PM **Introduction**

2:35 PM–3:05 PM **S1** **Regulation of Oxygen Homeostasis by Hypoxia-Inducible Factor-1**
Speaker: Gregg L. Semenza, The Johns Hopkins University School of Medicine

3:05 PM–3:35 PM	**S2**	**The Role of Oxygen Availability in Embryonic Development and Stem Cell Function** *Speaker: M. Celeste Simon, University of Pennsylvania Cancer Center*
3:35 PM–4:05 PM	**S3**	**The Role of HIF in Mesenchyme Differentiation and Limb Development** *Speaker: Amato Giaccia, Stanford University School of Medicine*
4:05 PM–4:20 PM		**Break**
4:20 PM–4:50 PM	**S4**	**Alpha Thalassemia and Limb Defects in Humans: A Possible Hypoxic Mechanism** *Speaker: Margaret Adam, Emory University*
4:50 PM–5:20 PM	**S5**	**Hypoxia as a Cause of Birth Defects** *Speaker: William S. Webster, University of Sydney*
5:20 PM–5:50 PM	**S6**	**Pharmacologically Induced Hypoxia: A Common Tratogenic Mechanism for Drugs with Potential to Cause Embryonic Cardiac Arrhythmia** *Speaker: Bengt Danielsson, Swedish Medical Product Agency*
5:50 PM–6:00 PM		**General Discussion**

6:00 PM–7:30 PM **WELCOME RECEPTION AND EXHIBITS OPEN—Monterey Grand Ballroom**
(Located in the main building near the hotel's front desk)

7:30 PM–9:00 PM ***BDRA* EDITORIAL BOARD MEETING—Spyglass 1**

MONDAY, JUNE 30, 2008

7:00 AM–8:00 AM **ANNUAL MEETING WORKING GROUP MEETING—Spyglass 2**

7:00 AM–8:00 AM **PUBLICATIONS COMMITTEE MEETING—Cypress 1**

7:30 AM–6:00 PM **REGISTRATION—Regency Foyer**

7:30 AM–8:00 AM **COFFEE AND CONTINENTAL BREAKFAST—Monterey Grand Ballroom**

8:00 AM–8:30 AM **SPECIAL LECTURE—Regency Main Ballroom**
Human Teratogens: Year in Review (L1)
Speaker: Lewis B. Holmes, Mass General Hospital for Children

8:30 AM–11:30 AM **TS/NBTS JOINT SYMPOSIUM—Regency Main Ballroom**
Pesticides and Neurodevelopment
Chairpersons: Mary E. Gilbert. U.S. Environmental Protection Agency and Susan L. Schantz, University of Illinois

8:30 AM–8:45 AM	**S7**	**An Overview of the Centers for Children's Environmental Health and Disease Prevention: Research, Translation and Outreach** *Speaker: Susan L. Schantz, University of Illinois*
8:45 AM–9:25 AM	**S8**	**Neurodevelopmental Effects of Prenatal Exposure to Chlorpyrifos in an Urban Cohort** *Speaker: Virginia Rauh, Columbia University*
9:25 AM–10:00 AM	**S9**	**Organophosphate Exposure and Neurodevelopment in a Mexican American Farmworker Population: The CHAMACOS Study** *Speaker: Brenda Eskenazi, University of California, Berkeley*
10:00 AM–10:15 AM		**Break**
10:15 AM–10:50 AM	**S10**	***In Utero* Exposure to Pesticides and Child Neurodevelopment in a New York City Cohort** *Speaker: Mary Wolff, Mt. Sinai*
10:50 AM–11:30 AM	**S11**	**Pesticide Exposure in Children: Evidence for a Take Home Pathway** *Speaker: Elaine M. Faustman, University of Washington*

8:30 AM–11:30 AM **PLATFORM SESSION II—Regency 4**

Diabetes in Pregnancy: Mechanisms and Outcomes

Chairpersons: James L. Mills, National Institute of Child Health and Human Development and Barbara F. Hales, McGill University

8:30 AM–8:45 AM **10** **Tibial Hemimelia with Preaxial Hallucal Polydactyly in Infants of Diabetic Mothers**

Adam MP[1], Hudgins L[2], Carey JC[3], Hall BD[4], Coleman K[1], Perez-Aytes A[5], Graham, Jr. JM[6]. [1]Emory University, Atlanta, GA, United States, [2]Stanford Medical Center, Palo Alto, CA, United States, [3]University of Utah Medical Center, Salt Lake City, UT, United States, [4]University of Kentucky Medical Center, Lexington, KY, United States, [5]Hospital Universitario Infantil La Fe, Valentia, Spain, [6]Cedars-Sinai Medical Center, Los Angeles, CA, United States.

8:45 AM–9:00 AM **11** **Does Periconceptional Use of Vitamin Supplements Containing Folic Acid Attenuate the Risk for Diabetes-Associated Birth Defects?**

Correa A[1], Gilboa SM[1], Botto LD[2], Moore CA[1], Hobbs CA[3], Cleves M[3], Colarusso T[1], Waller DK[4], Reece EA[5]. [1]CDC, NCBDDD, Atlanta, GA, United States, [2]University of Utah, Salt Lake City, UT, United States, [3]University of Arkansas, Little Rock, AR, United States, [4]University of Texas, Houston, TX, United States, [5]University of Maryland, Baltimore, MD, United States.

9:00 AM–9:15 AM **12** **The Interrelation of Hyperglycemia, Hypoxia and Oxidative Stress in Diabetes-Induced Embryopathy in Rats**

Ornoy A, Bishitz N, Rand S. Hebrew University Hadassah Medical School, Jerusalem, Israel.

9:15 AM–9:30 AM **13** **Apoptosis Signal-Regulating Kinase 1 (ASK1) Involves in Maternal Diabetes-Induced Neural Tube Defects (NTDs)**

Yang P, Zhao Z, Reece EA. Department of Obstetrics, Gynecology & Reproductive Sciences, University of Maryland School of Medicine, Baltimore, MD, United States.

9:30 AM–9:45 AM **14** **Epidemiological Study of Risk Factors for VATER Association: Data from the National Birth Defects Prevention Study 1997–2003**

Smelser DT[1], Moore CA[1], Olney RS[1], Crider KS[1], Reefhuis J[1], Botto LD[2], Druschel CM[3], Romitti PA[4]. [1]Centers for Disease Control and Prevention, Atlanta, GA, United States, [2]University of Utah, Salt Lake City, UT, United States, [3]New York State Department of Health, Troy, NY, United States, [4]University of Iowa, Iowa City, IA, United States.

9:45 AM–10:00 AM **15** **Birth Defect Risk in Diabetic Pregnancy: Implications of Altered Gene Expression in Embryo and Placenta**

Kappen C[1], Kruger C[1], Pavlinkova G[2], Salbaum JM[1]. [1]Pennington Biomedical Research Center/LSU, Baton Rouge, LA, United States, [2]University of Nebraska Medical Center, Omaha, NE, United States.

10:00 AM–10:15 AM **Break**

Gene Expression and Genomics

Chairpersons: Diana M. Jariloff, University of British Columbia and Michael F. O'Hara, Novartis Pharmaceuticals

10:15 AM–10:30 AM **16** **Gene Expression Profile Induced by Testosterone in the Fetal Rat Testis**

Daston GP, Overmann GJ, Carr GJ, Tiesman JP, Naciff JM. Procter & Gamble, Cincinnati, OH, United States.

10:30 AM–10:45 AM **17** **INSL3 Levels in Amniotic Fluid of Human Fetuses**

Ivell RA[2], Ivell R[2], Driscoll D[1], Manson JM[1]. [1]University of Pennsylvania, Philadelphia, PA, United States, [2]University of Adelaide, Adelaide, Australia.

10:45 AM–11:00 AM **18** **Evaluation of MicroRNAs as Markers of Development Toxicity**

Streck RD, Kumpf SW. Developmental & Reproductive Toxicology, Pfizer Global R & D, Groton, CT, United States.

11:00 AM–11:15 AM **19** **Regulation of Folate Receptor 1 Expression in the Yolk Sac**
Salbaum JM[1], Finnell RH2, Kappen C[1]. [1]Pennington Biomedical Research Center, Baton Rouge, LA, United States, [2]Texas Institute for Genomic Medicine, Houston, TX, United States.

11:15 AM–11:30 AM **20** **An Approach to Using Genomics Data in Risk Assessment: Dibutyl Phthalate (DBP) Case Study**
Euling SY[1], Makris S[1], Sen B[2], White L[2], Benson R[3], Gaido KW[4], Kim AS[1], Hester S[5], Wilson VS[5], Keshava C[1], Keshava N[1], Foster PM[6], Androulakis IP[7], Ovacik M[7], Ierapetritou MG[7], Gray, Jr. LE[5], Thompson C[1], Chiu W[1]. [1]NCEA, US EPA, Washington, DC, United States, [2]NCEA, US EPA, Research Triangle Park, NC, United States, [3]Region 8, US EPA, Denver, CO, United States, [4]The Hamner Institute, Research Triangle Park, NC, United States, [5]NHEERL, US EPA, Research Triangle Park, NC, United States, [6]NIEHS, Research Triangle Park, NC, United States, [7]ebCTC, Rutgers/UMDNJ, Piscataway, NJ, United States.

11:30 AM–1:00 PM **LUNCH ON OWN**

11:30 AM–1:00 PM **PAST PRESIDENTS' LUNCHEON** *(By invitation only)*—**Windjammer 1**

11:30 AM–12:30 PM **STUDENT AFFAIRS COMMITTEE MEETING—Spyglass 2**

1:00 PM–2:00 PM **ROBERT L. BRENT LECTURE—Regency Main Ballroom**
Can Maternal Hypertension Be Safely Treated During Pregnancy?
Speaker: Jan M. Friedman, University of British Columbia

2:00 PM–4:30 PM **NUTRITION AND FOOD SAFETY PRE-CONCEPTION TO ADOLESCENCE SYMPOSIUM—Regency Main Ballroom**
Chairpersons: Carl L. Keen, University of California, Davis and William Slikker, Jr., National Center for Toxicological Research

2:00 PM–2:10 PM **Introduction**
Speaker: William Slikker, Jr., National Center for Toxicological Research

2:10 PM–2:45 PM **S12** **Changing Expectations of Food and Food Safety**
Speaker: Carl Keen, University of California, Davis

2:45 PM–3:15 PM **S13** **Flavonoids and Infant Leukemia**
Speaker: Logan G. Spector, University of Minnesota Medical School

3:15 PM–3:30 PM **Break**

3:30 PM–4:00 PM **S14** **Acrylamide in Food and Issues of Safety During Development**
Speaker: Merle Paule, National Center for Toxicological Research

4:00 PM–4:30 PM **S15** **Concepts and Challenges in Developing Personalized Nutrition and Medicine for Pregnant Women and Infants**
Speaker: Jim Kaput, University of California, Davis

2:00 PM–4:30 PM **JOINT TS/OTIS PLATFORM SESSION III—Regency 1**
Chronic Maternal Diseases and Effects of Their Treatment
Chairpersons: Jan M. Friedman, University of British Columbia and Diana Johnson, University of California, San Diego

2:00 PM–2:05 PM **Introduction**

2:05 PM–2:20 PM **21** **Mycophenolate Mofetil Embryopathy: A Recognizable Phenotype**
Anderka MT[1], Lin AE[2,1], Abuelo D[3,4], Mitchell AA[5]. [1]Massachusetts Department of Public Health, Boston, MA, United States, [2]Massachusetts General Hospital, Boston, MA, United States, [3]Rhode Island Hospital, Providence, RI, United States, [4]Hasbro Children's Hospital, Providence, RI, United States, [5]Slone Epidemiology Center at Boston University, Boston, MA, United States.

2:20 PM–2:40 PM **22** **Pregnancy Outcome and Cognitive Development of Children Exposed *In Utero* to Cyclosporine Following Maternal Renal Transplant**
Nulman I[1,2], Sgro M[1,2], Barrera M[1,2], Chitayat D[1,2], Cairney J[3,1], Koren G[1,2]. [1]The Hospital For Sick Children, Toronto, ON, Canada, [2]University of Toronto, Toronto, ON, Canada, [3]Centre for Addiction and Mental Health, Toronto, ON, Canada.

2:40 PM–3:00 PM **23** **Multiple Sclerosis—Effects of Immunomodulatory Therapy on Pregnancy Outcome: An Observational Study of the Teratology Information Service Berlin, Germany**
Weber-Schoendorfer C. Pharmokovigilanz- und Beratungszentrum, Embryonaltoxikologie, Berlin, Germany.

3:00 PM–3:15 PM **24** **Asthma Exacerbations During Pregnancy: The Role of Fetal Sex**
Bakhireva LN[1], Tucker CM[2], Schatz M[3], Jones KL[4], Slymen DJ[5], Klonoff-Cohen HS[4], Gresham L[5], Johnson D[4], Chambers CD[4]. OTIS Collaborative Research Group[6]. [1]University of New Mexico, Albuquerque, NM, United States, [2]Midwestern University, Glendale, AZ, United States, [3]Kaiser-Permanente Medical Center, San Diego, CA, United States, [4]University of California, San Diego, La Jolla, CA, United States, [5]San Diego State University, San Diego, CA, United States, [6]OTIS, San Diego, CA, United States.

3:15 PM–3:30 PM **Break**

Molecular and Environmental Pathways Leading to Birth Defects
Chairpersons: Andrew F. Olshan, University of North Carolina and Elizabeth A. Conover, University of Nebraska

3:30 PM–3:45 PM **25** **Maternal Nutrient Intake and Risk for Transverse and Longitudinal Limb Deficiency: Results from the National Birth Defects Prevention Study, 1997–2003**
Robitaille J[1], Carmichael SL[2], Shaw GM[2], Olney RS[1]. [1]CDC, NCBDDD, Atlanta, GA, United States, [2]March of Dimes Birth Defects Foundation, California Birth Defects Monitoring Program, Berkeley, CA, United States.

3:45 PM–4:00 PM **26** **Maternal Caffeine Intake During Pregnancy and Risk of Orofacial Clefts**
Collier SA[1], Browne ML[2], Rasmussen SA[1], Honein MA[1]. [1]National Center on Birth Defects and Developmental Disabilities, Atlanta, GA, United States, [2]Bureau of Environmental & Occupational Epidemiology, New York State Department of Health, Troy, NY, United States.

4:00 PM–4:15 PM **27** **A Role for DNA Methylation in the Causation of Cleft Lip and Palate in the A/WySn Mouse Model**
Juriloff DM[1], Harris MJ[1], Gagnier L[2], Mager DL[1,2]. [1]Dept Medical Genetics, University of British Columbia, Vancouver, BC, Canada, [2]Terry Fox Laboratory, BC Cancer Agency, Vancouver, BC, Canada.

4:15 PM–4:30 PM **28** **Hypospadias and Maternal Intake of Nutrients Related to Methylation**
Carmichael SL, Yang W, Correa A, Olney RS, Shaw GM. March of Dimes, California Research Division, Oakland, CA, United States.

4:30 PM–5:30 PM **STRATEGIC PLANNING SESSION UPDATE—Regency Main Ballroom**

5:30 PM–7:30 PM **TS/NBTS/OTIS JOINT POSTER SESSION AND EXHIBITS OPEN—Monterey Grand Ballroom**

Teratology Society Posters: P1–P44

NBTS Posters: NBTS 17–NBTS 25

OTIS Posters: OTIS P1–OTIS P9

7:30 PM–9:30 PM **MARTA/MTA STUDENT CAREER EVENT—Cypress 1**

TUESDAY, JULY 1, 2008

6:30 AM–7:00 AM **SUNRISE MINI-COURSE BREAKFAST—Regency Main Ballroom**

7:00 AM–8:30 AM **SUNRISE MINI-COURSE** *(Separate registration required)*—**Regency Main Ballroom**
Nanoparticles
Organized by the Education Committee: Eias A. Zahalka, Chairperson

7:00 AM–7:30 AM		**General Overview of Nanomaterials: What They Are, How They Are Made, and What They Are Used For** *Speaker: Amy K. Madl, University of California, Davis*
7:30 AM–8:00 AM		**Environmental Distribution (Current and Potential), Routes of Exposure, and Deposition in the Lung** *Speaker: Kent E. Pinkerton, University of California, Davis*
8:00 AM–8:30 AM		**Nanoparticles and Developmental/ Placental Toxicology** *Speaker: Richard K. Miller, University of Rochester Medical Center*

7:00 AM–5:00 PM **REGISTRATION—Regency Foyer**

8:00 AM–8:30 AM **COFFEE AND CONTINENTAL BREAKFAST—Monterey Grand Ballroom**

8:30 AM–9:15 AM **PARTNERSHIP LECTURE—Regency Main Ballroom**
Signals from Above: The Normative Interactions of Embryos and the Environment (L2)
Speaker: Scott F. Gilbert, Swarthmore College

9:15 AM–11:45 AM **TS/OTIS JOINT SYMPOSIUM—Regency 1**
Identifying Risk Factors for Birth Defects: An Update on the National Birth Defects Prevention Study (NBDPS)
Chairpersons: Sonja A. Rasmussen, Centers for Disease Control and Prevention and Dee L. Quinn, University of Arizona

9:15 AM–9:20 AM		**Introduction** *Speaker: Sonja A. Rasmussen, Centers for Disease Control and Prevention*
9:20 AM–9:40 AM	**S16**	**The National Birth Defects Prevention Study (NBDPS): Working Together Since 1997 to Identify Risk Factors for Birth Defects** *Speaker: Jennita Reefhuis, Centers for Disease Control and Prevention*
9:40 AM–10:00 AM	**S17**	**Nutrition and Birth Defects—Perspectives from the NBDPS** *Speaker: Gary M. Shaw, Children's Hospital Oakland Research Institute*
10:00 AM–10:15 AM		**Break**
10:15 AM–10:35 AM	**S18**	**Medications and Birth Defects in the NBDPS** *Speaker: Allen A. Mitchell, Slone Epidemiology Center at Boston University*
10:35 AM–10:55 AM	**S19**	**Incorporating Study of Genetic Risk Factors into NBDPS** *Speaker: Andrew F. Olshan, University of North Carolina*
10:55 AM–11:15 AM	**S20**	**Met and Unmet Health Care Needs of Children with Orofacial Clefts Enrolled in the National Birth Defects Prevention Study** *Speaker: James M. Robbins, Arkansas Children's Hospital*
11:15 AM–11:35 AM	**S21**	**Large Multi-Site Epidemiologic Studies: Challenges and Opportunities** *Speaker: Margaret Honein, Centers for Disease Control and Prevention*
11:35 AM–11:45 AM		**Panel Discussion**

9:15 AM–11:45 AM **MARTA/MTA SYMPOSIUM—Regency Main Ballroom**
Current Methods for Developmental Toxicity Screening
Chairpersons: Eve Mylchreest, Wyeth Research and Anthony M. DeLise, Sanofi-Aventis

9:15 AM–9:25 AM		**Introduction** *Speaker: Eve Mylchreest, Wyeth Research*
9:25 AM–10:00 AM	**S22**	**Embryonic Stem Cell-Based Models for Developmental Toxicology** *Speaker: Donald B. Stedman, Pfizer Global Research & Development*
10:00 AM–10:15 AM		**Break**
10:15 AM–10:45 AM	**S23**	**Use of the Zebrafish Assay with Pharmaceutical Compounds** *Speaker: Kimberly Brannen, Bristol-Myers Squibb*
10:45 AM–11:15 AM	**S24**	**Use of Whole Embryo Culture in Pharmaceutical Screening/Testing** *Speaker: Terence R.S. Ozolins, Pfizer, Inc.*
11:15 AM–11:45 AM	**S25**	**Whole Embryo Culture: Novel Endpoints?** *Speaker: Barbara Hales, McGill University*

11:45 AM–1:30 PM **TS/NBTS JOINT POSTER SESSION AND EXHIBITS OPEN—Monterey Grand Ballroom**
Teratology Society Posters: P45–P74
NBTS Posters: NBTS 31–NBTS 40

12:30 PM–1:30 PM **2009 PROGRAM COMMITTEE MEETING—Spyglass 2**

1:30 PM–3:15 PM **JOINT TS/NBTS PLATFORM SESSION IV—Regency 4**
CNS and Prenatal Exposures: Teratological and Neurodevelopmental Outcomes
Chairpersons: Jane Adams, University of Massachusetts and Charles V. Vorhees, Cincinnati Children's Research Foundation

1:30 PM–1:45 PM	**29**	**Incidence of Major Malformations in Infants Following Antidepressant Exposure in Pregnancy: Results of a Large Cohort Study** *Einarson A, Choi J, Koren G. The Hospital for Sick Children, The Motherisk Program, Toronto, ON, Canada.*
1:45 PM–2:00 PM	**30**	**Antiepileptic Drugs as Cognitive Teratogens: A Prospective Study of Creativity in Children Exposed to Valproate, Carbamazepine, and Lamotrigine Monotherapy** *McVearry KM[1], Meador K[2]. [1]Georgetown University Department of Neurology, Washington, DC, United States, [2]University of Florida McKnight Brain Institute, Gainesville, FL, United States.*
2:00 PM–2:15 PM	**31**	**Intrauterine Growth During Different Time Windows in Relation to Mental Development at 13 Months Postpartum** *von Ehrenstein OS, Mikolajczyk RT, Zhang J. National Institute of Child Health & Human Development / NIH, Bethesda, MD, United States.*
2:15 PM–2:30 PM	**31**	**Low-Level Prenatal Exposure to Tobacco Smoke and Newborn Neurobehavior** *Yolton K[1], Khoury J[1], Lanphear B[1], Succop P[2], Lester B[3]. [1]Cincinnati Children's Hospital Medical Center, Cincinnati, OH, United States, [2]University of Cincinnati, Cincinnati, OH, United States, [3]Brown University, Providence, RI, United States.*
2:30 PM–2:45 PM	**33**	**Binge Ethanol Exposure Over Postnatal Days 4-9 and 7-9 Produces Deficits in Trace and Long-Delay Eyeblink Conditioning in the Rat** *Murawski N, Burman M, Brown K, Stanton M. University of Delaware, Newark, DE, United States.*
2:45 PM–3:00 PM	**34**	**Prenatal Exposure to Cocaine Alters Neurobehavioral Developmental Milestones in Rats** *Handu SS[1,2], Datta H[2], Sankaranarayanan A[2], James H[1], Al Khaja KAJ[1], Sequeira RP[1]. [1]Department of Pharmacology & Therapeutics, College of Medicine & Medical Sciences, Arabian Gulf University, Manama, Bahrain, [2]Department of Pharmacology, Postgraduate Institute of Medical Education and Research, Chandigarh, India.*

3:00 PM–3:15 PM	**35**	**Intravenous Cocaine Administration Throughout Pregnancy in the Rat: Preliminary Results** *Dow-Edwards D, Zhao N, Jozwicka A. State University of New York, Brooklyn, NY, United States.*

1:30 PM–4:30 PM **EMBRYONIC STEM CELLS AND BEYOND SYMPOSIUM—Regency Main Ballroom**

Organized by Janet Uriu-Adams, University of California, Davis and Christina D. Chambers, University of California, San Diego

Chairpersons: Rocky S. Tuan, National Institute of Arthritis, NIH and Gary Schoenwolf, University of Utah

1:30 PM–1:45 PM		**Introduction** *Speaker: Rocky S. Tuan, National Institute of Arthritis, NIH*
		Session I *Moderator: Rocky S. Tuan, National Institute of Arthritis, NIH*
1:45 PM–2:15 PM	**S26**	**Human Embryonic Stem Cells and the Control of Growth and Differentiation of Human Pluripotent Stem Cells** *Speaker: Martin Pera, University of Southern California*
2:15 PM–2:45 PM	**S27**	**Human Embryonic Stem Cells: Advancing Technology for Therapeutic Application** *Speaker: Jane Lebkowski, Geron Corporation*
2:45 PM–3:15 PM	**S28**	**The Homeostatic Pressure Exerted by Stem Cells in Degenerative or Injured CNS Environments** *Speaker: Evan Snyder, Burnham Institute for Medical Research*
3:15 PM–3:30 PM		**Break**
		Session II *Moderator: Gary Schoenwolf, University of Utah*
3:30 PM–4:00 PM	**S29**	**Reprogramming Cells to Pluripotency by Defined Factors** *Speaker: Nimet Maherali, Harvard University*
4:00 PM–4:30 PM	**S30**	**Early Developmental Events and Modeling Them *In Vitro*** *Speaker: Mahendra S. Rao, Invitrogen*

1:30 PM–5:30 PM **TS, OTIS AND INTERNATIONAL SOCIETY FOR PHARMACOEPIDEMIOLOGY (ISPE) JOINT WORKSHOP—Windjammer Room**

Pregnancy Registry Methods

Organized by Lewis B. Holmes, Mass General Hospital for Children

Chairpersons: Allen A. Mitchell, Boston University and Janine E. Polifka, University of Washington

1:30 PM–1:40 PM		**Introduction** *Speaker: Lewis B. Holmes, Mass General Hospital for Children*
		Session I *Moderator: Allen Mitchell, Slone Epidemiology Center at Boston University*
1:40 PM–2:10 PM	**W1**	**Informed Consent Processes in Pregnancy Registries** *Speaker: Kristine Shields, Merck & Company, Inc.*
2:10 PM–2:40 PM	**W2**	**Selection of Comparison Groups for Pregnancy Registries** *Speaker: Angela Scheuerle, Tesserae Genetics*
2:40 PM–3:10 PM	**W3**	**Global Marketing of Registries: To the Public and to the Patient** *Speaker: Diego F. Wysynski, Amgen Inc.*
3:10 PM–3:40 PM		**Poster Session with Refreshments (WP1–WP4)**
		Session II *Moderator: Janine E. Polifka, University of Washington*
3:40 PM–4:10 PM	**W4**	**Pregnancy Registries: The Importance of Inclusion and Exclusion Criteria** *Speaker: Lewis B. Holmes, Mass General Hospital for Children*

4:10 PM–4:40 PM	**W5**	**Signal Detection and Follow-Up** *Speaker: Allen Mitchell, Slone Epidemiology Center at Boston University*
4:40 PM–5:00 PM	**W6**	**European Perspective: Harmonization of Guidelines for Pregnancy Registries** *Speaker: Elisabeth Elefant, Paris TIS*
5:00 PM–5:20 PM	**W7**	**U.S. FDA Perspective on Pregnancy Registry Data: What Do We Want in the Label** *Speaker: Karen B. Feibus, U.S. FDA/CDER/Office of New Drugs*
5:20 PM–5:30 PM		**Conclusion and Topic Suggestions for Next Year** *Speaker: Lewis B. Holmes, Mass General Hospital For Children*

4:30 PM–5:30 PM **NATIONAL CHILDREN'S STUDY UPDATE—Regency Main Ballroom**

4:30 PM–5:00 PM	**National Update: 2008 and Beyond** *Speaker: Peter Scheidt, Director National Children's Study*
5:00 PM–5:30 PM	**NCS in California** *Speaker: James Swanson, Child Development Center, University of California, Irvine; Principal Investigator, NCS Orange County Vanguard Center*

5:30 PM–7:00 PM **SPECIAL SESSION: OPEN DEBATE—Regency 1**
One-Generation *versus* Multi-Generation Reproductive Toxicity Testing
Chairpersons: Donald G. Stump, WIL Research Laboratories and M. Sue Marty, The Dow Chemical Company

5:30 PM–5:45 PM	**E1**	**Moving Towards a One-Generation Protocol** *Speaker: Susan Makris, U.S. Environmental Protection Agency*
5:45 PM–6:00 PM	**E2**	**Keeping a Multi-Generation Protocol** *Speaker: Paul M.D. Foster, National Institute of Environmental Health Sciences*
6:00 PM–7:00 PM		**Open Discussion**

5:30 PM–7:30 PM **SPECIAL SESSION—Regency Main Ballroom**
Teaching Embryology/Teratology in the 21st Century
Organized by the Student Affairs Committee: Mary Alice Smith, Chairperson
Chairpersons: Mark Torchia, St. Boniface General Hospital and Maia L. Green, University of Louisville

5:30 PM–5:35 PM		**Introduction: Is Embryology Disappearing from the Curriculum?** *Speakers: Mark Torchia, St. Boniface General Hospital and Maia L. Green, University of Louisville*
5:35 PM–6:00 PM	**E3**	**Evo Devo: Integrating Development and Evolution** *Speaker: Scott F. Gilbert, Swarthmore College*
6:00 PM–6:25 PM	**E4**	**Why Would Anyone Want to Learn Embryology and How Would It be Taught if They Did** *Speaker: Thomas W. Sadler*
6:25 PM–6:50 PM	**E5**	**Teaching Embryology as an Integrated Discipline** *Speaker: Thomas E. Kwasigroch, East Tennessee State University*
6:50 PM–7:15 PM	**E6**	**Using Web-Based Tools for Teaching Embryology** *Speaker: Thomas B. Knudsen, National Center for Computational Toxicology*
7:15 PM–7:30 PM		**Open Discussion**

WEDNESDAY, JULY 2, 2008

7:00 AM–8:00 AM **PUBLIC AFFAIRS COMMITTEE MEETING—Spyglass 2**

7:00 AM–8:00 AM **WORKING GROUP OVERSIGHT COMMITTEE MEETING—Spyglass 1**

7:30 AM–2:00 PM **REGISTRATION—Regency Foyer**

7:30 AM–8:00 AM **COFFEE AND CONTINENTAL BREAKFAST—Regency Foyer**

8:00 AM–10:00 AM **PLATFORM SESSION V—Regency 1**

Risk Factors for Adverse Birth Outcomes From Medications to the Environment

Chairpersons: George P. Daston, Procter & Gamble Company and Janet R. Hardy, University of Massachusetts Medical School

8:00 AM–8:15 AM **36** **Use of Clomiphene Citrate and Selected Major Birth Defects: Data from the National Birth Defects Prevention Study, U.S.A. 1997–2004**

Reefhuis J[1], Honein MA[1], Schieve LA[1], Correa A[1], Hobbs CA[2], Rasmussen SA[1]. [1]NCBDDD, CDC, Atlanta, GA, United States, [2]University of Arkansas for Medical Sciences, Little Rock, AR, United States.

8:15 AM–8:30 AM **37** **The Effect of Some Cardiac Ion Channel Blockers of the Rat Embryonic Heart *In Vitro***

Abela D, Webster WS, Ritchie HE, Gavin C, Karlsson K. The University of Sydney, Sydney, Australia.

8:30 AM–8:45 AM **38** **Opioid Analgesic Treatment During Pregnancy and Adverse Fetal Outcomes: Results from the National Birth Defects Prevention Study, 1997–2003**

Broussard CS[1], Reefhuis J[1], Friedman JM[2], Rasmussen SA[1], Jann MW[3], Honein MA[1]. [1]Centers for Disease Control and Prevention, Atlanta, GA, United States, [2]University of British Columbia, Vancouver, BC, Canada, [3]Mercer University, Atlanta, GA, United States.

8:45 AM–9:00 AM **39** **Fetal Outcome of Congenital Toxoplasmosis Is Improved With Maternal Immune Stimulation**

Hrubec TC[1,2], Chavan V[2], Lindsay DS[2], Holladay SD[1]. [1]E. Via Virginia College of Osteopathic Medicine, Blacksburg, VA, United States, [2]VA-MD Regional College of Veterinary Medicine, Virginia Tech, Blacksburg, VA, United States.

9:00 AM–9:15 AM **40** **Maternal Febrile Illnesses and Risk for Congenital Heart Defects: Findings from the National Birth Defects Prevention Study**

Botto LD[1], Bishop Stone M[1], Browne ML[2], Feldkamp ML[1], Lammer E[3], Shaw GM[4], National Birth Defects Prevention Study[5]. [1]Dept Pediatrics/Medical Genetics, University of Utah, Salt Lake City, UT, United States, [2]New York State Department of Health, Troy, NY, United States, [3]Oakland Children's Hospital, Oakland, CA, United States, [4]March of Dimes California Research Division, Oakland, Berkeley, CA, United States, [5]National Birth Defects Prevention Study, Atlanta, GA, United States.

9:15 AM–9:30 AM **41** **Pregnancy Registries: Larger Sample Sizes Essential**

Holmes LB[1,2], Smith CR[1,2], Hernandez-Diaz S[1,3]. [1]North American AED Pregnancy Registry, Boston, MA, United States, [2]Genetics Unit, MassGeneral Hospital for Children, Boston, MA, United States, [3]Harvard School of Public Health, Boston, MA, United States.

9:30 AM–9:45 AM **42** **Placental and Neural Tube Defects After Maternal Fumonisin or FTY720 Exposure: Role of Bioactive Sphingolipids**

Gelineau-van Waes J[1], Maddox J[1], Wilberding J[1], Voss K[2], Riley R[2]. [1]University of Nebraska Medical Center, Omaha, NE, United States, [2]USDA-ARS Toxicology & Mycotoxin Research Unit, Athens, GA, United States.

9:45 AM–10:00 AM **43** **EPA's Endocrine Disruptors Programs: Research Used in Agency Decision-Making**

Francis EZ[1], Timm G[1], Laessig S[1], Bayne E[2]. [1]US Environmental Protection Agency, Washington, DC, United States, [2]American Schools of Public Health, Washington, DC, United States.

8:00 AM–10:00 AM **PUBLIC AFFAIRS COMMITTEE/ILSI HESI VACCINES SYMPOSIUM—Regency Main Ballroom**

Chairpersons: Dana L. Shuey, Endo Pharmaceuticals, Inc. and Jane Stewart, AstraZeneca Pharmaceuticals

8:00 AM–8:25 AM **S31** **The Risks and Benefits of the Immunization Pregnant Women and Women of Reproductive Age: The Risk of Doing Nothing**
Speaker: Robert L. Brent, Alfred I. duPont Hospital for Children

8:25 AM–8:50 AM **S32** **Nonclinical Testing: Designing Animal Studies to Assess Vaccine Safety in Pregnancy**
Speaker: Sarah Gould, Sanofi Pasteur

8:50 AM–9:15 AM **S33** **Regulatory Considerations Pertaining to Maternal Immunization**
Speaker: Marion F. Gruber, Office of Vaccines Research and Review, U.S. FDA/CDER

9:15 AM–9:40 AM **S34** **Case Study: Influenza Vaccine and Its Use During Pregnancy**
Speaker: Sonja A. Rasmussen, Centers for Disease Control

9:40 AM–10:00 AM **Panel Discussion**

10:00 AM–10:30 AM **WARKANY TEA—Regency Foyer**

10:30 AM–12:15 PM **PLATFORM SESSION VI—Regency 1**

Research Methods Update From Laboratory to the Clinic

Chairpersons: Edward W. Carney, The Dow Chemical Company and Wafa A. Harrouk, U.S. Food and Drug Administration

10:30 AM–10:45 AM **44** **Maternal and Fetal Toxicity in Developmental Toxicology Bioassays: Weight Changes and Their Biological Significance**
Chernoff N, Rogers EH, Gage MI. U.S. Environmental Protection Agency, Research Triangle Park, NC, United States.

10:45 AM–11:00 AM **45** **Reduced Water Intake: Implications for Rodent Developmental and Reproductive Toxicity Studies**
Campbell MA[1], Golub MS[2], Iyer P[2], Kaufman FL[2], Li LH[2], Moran F[2], Morgan JE[2], Donald JM[2]. [1]Office of Environmental Health Hazard Assessment, Cal/EPA, Oakland, CA, United States, [2]Office of Environmental Health Hazard Assessment, Cal/EPA, Sacramento, CA, United States.

11:00 AM–11:15 AM **46** **EKG-Gated Echocardiography in the Developing Chick Embryo Heart**
Schellpfeffer MA, Kolesari GL. Medical College of Wisconsin, Milwaukee, WI, United States.

11:15 AM–11:30 AM **47** **Knowledge Base for *v-Embryo*: Information Infrastructure for *In Silico* Modeling**
Singh AV[2], Shah I[1], Kavalock RJ[1], Knudsen TB[1]. [1]National Center for Computational Toxicology, Office of Research and Development, USEPA, Research Triangle Park, NC, United States, [2]Lockheed Martin, Research Triangle Park, NC, United States.

11:30 AM–11:45 AM **48** **Recruitment of an Unexposed Control Group for a Pregnancy Registry**
Smith CR, Holmes LB. North American AED Pregnancy Registry, Genetics Unit, MassGeneral Hospital for Children, Boston, MA, United States.

11:45 AM–12:00 NOON **49** **Application of Micro-Computed Tomography in Rat Teratology Studies**
Johnson K[1], Davis J[2], Ryan L[3], Moser G[2]. [1]NIEHS, Research Triangle Park, NC, United States, [2]IntegratedLaboratory Inc., Durham, NC, United States, [3]HistoMax, Durham, NC, United States.

12:00 NOON–12:15 PM **50** **Using Drink Size to Talk About Drinking During Pregnancy: A Randomized Clinical Trial of Early Start Plus**
Armstrong MA[1], Kaskutas LA[2], Witbrodt J[2], Taillac C[1], Hung YY[1], Osejo V[1], Escobar G[1]. [1]Kaiser Permanente, Oakland, CA, United States, [2]Alcohol Research Group, Emeryville, CA, United States.

10:30 AM–12:30 PM **RARE DISEASES SYMPOSIUM—Regency Main Ballroom**
Vascular Disruption Pathogenesis for Selected Birth Defects
Chairperson: Martha M. Werler, Slone Epidemiology Center at Boston University

10:30 AM–11:00 AM	**S35**	**Vascular Disruption Defects: Embryology and Clinical Observations** *Speaker: Margot Van Allen, University of British Columbia*
11:00 AM–11:30 AM	**S36**	**Free Radical Participation in Vascular Disruption** *Speaker: Alan G. Fantel, University of Washington*
11:30 AM–12:00 NOON	**S37**	**Epidemiologic Evidence of Vasoactive Exposures Contributing to the Development of Vascular Disruption Defects** *Speaker: Martha M. Werler, Slone Epidemiology Center at Boston University*
12:00 NOON–12:30 PM	**S38**	**Genetic Risk Factors for Vascular Compromise in Fetal Development** *Speaker: Edward J. Lammer, Children's Hospital Oakland Research Institute*

12:30 PM–1:30 PM **LUNCH ON OWN**

1:30 PM–4:30 PM **WILEY-LISS SYMPOSIUM—Regency Main Ballroom**
Left-Right Patterning
Organized by the Publications Committee: Mark E. Hurtt, Chairperson

1:30 PM–1:35 PM	**S39**	**Opening Remarks** *Speaker: Nigel Brown, St. George's University Hospital*
1:35 PM–2:10 PM	**S40**	**Introduction to the Embryologic Basis of Left-Right Asymmetry: It's All Happening at the Node!** *Speaker: Gary Schoenwolf, University of Utah*
2:10 PM–2:45 PM	**S41**	**Zebrafish Models of Left-Right Asymmetry** *Speaker: Didier Stanier, University of California, San Francisco*
2:45 PM–3:00 PM		**Break**
3:00 PM–3:35 PM	**S42**	**Interspecies Comparisons** *Speaker: H. Joseph Yost, University of Utah*
3:35 PM–4:10 PM	**S43**	**Human Heterotaxy Syndromes** *Speaker: John W. Belmont, Baylor College of Medicine*
4:10 PM–4:30 PM		**Panel Discussion** *Moderator: Nigel Brown, St. George's University Hospital*

4:30 PM–6:00 PM **BUSINESS MEETING AND REPORTS FROM *BDR* EDITORS—Regency Main Ballroom**

6:30 PM–7:30 PM **RECEPTION—Monterey Terrace**

7:30 PM–10:00 PM **BANQUET—Monterey Grand Ballroom**

THURSDAY, JULY 3, 2008

7:00 AM–10:00 AM **COUNCIL 2 MEETING—Spyglass 2**

Annual Meeting Exhibitors

(as of March 17, 2008)

The Teratology Society thanks the following organizations for their participation as Exhibitors at the 2008 Annual Meeting

Charles River

Experimur

Exponent, Inc.

Huntingdon Life Sciences

Instem

John Wiley & Sons

Numira Biosciences

PDS Preclinical Data Systems, Inc.

SNBL USA, Ltd.

Exhibitor Information

(as of March 17, 2008)

All information printed in this exhibitor section is listed in alphabetical order and was submitted by the exhibiting company.

CHARLES RIVER — BOOTH #8

22022 Transcanadienne
Senneville, QC H9X 3R3
Canada

Tel: (514) 630-8200 ext. 8923
Fax: (514) 630-8230
E-mail: Nathalie.poirer@crl.com
Web site: www.criver.com

Charles River is committed to being the premier outsourcing partner for pharmaceutical and biotechnology companies, government agencies, academic institutions, as well as hospitals. With over 100 facilities in 21 countries, Charles River brings together leading scientist and regulatory experts with strong academic and industry experience from around the world. Our broad range of capabilities spans each phase of drug discovery and development in every major therapeutic area, providing exactly what our customers need to increase speed to market with the convenience of dealing with one partner for their research needs.

EXPERIMUR — BOOTH #5

2929 S. Ellis Avenue
Dreyfus Building, Suite 600
Chicago, IL 60616
United States

Tel: (312) 842-9700 ext. 232
Fax: (312) 842-9701
E-mail: fdenahan@experimur.com
Web site: www.experimur.com

Experimur is a full-service toxicology testing and research laboratory with extensive experience in the conduct of developmental (Seg I, II & III) and reproductive (single and multi-generation) toxicity assessments, including sperm morphology and vaginal cytology, as well as general toxicity (acute, subchronic, chronic and carcinogenicity), neurotoxicity, and pharmacokinetic/ADME studies in species ranging from rodents to primates. With an experienced and well-trained team that has worked together for over 25 years and successfully completed thousands of GLP-compliant, pre-clinical (non-clinical) studies, we are committed to providing our customers with top quality and unmatched service.

EXPONENT, INC. — BOOTH #13

149 Commonwealth Drive
Menlo Park, CA 94025
United States

Tel: (650) 688-6951
Fax: (650) 688-7077
E-mail: ameyer@exponent.com
Web site: www.exponent.com

Exponent's developmental and reproductive toxicologists bring extensive experience that spans the chemical and pharmaceutical industry, academia, and government. Exponent's scientists have broad regulatory experience and have been involved in developing regulatory guidelines for neurotoxicology, reproductive and developmental toxicity testing and risk assessment, endocrine disruption, cancer risk assessment and quantitative risk assessment

HUNTINGDON LIFE SCIENCES — BOOTH #3

P.O. Box 2360
Mettlers Road
East Millstone, NJ 08875
United States

Tel: (732) 873-2550
Fax: (732) 873-3992
E-mail: sales@princeton.huntingdon.com
Web site: www.huntingdon.com

Huntingdon Life Sciences is a contract research organization with scientific leadership and technical excellence in reproductive and developmental toxicology. We have extensive experience designing and conducting studies acceptable for submission to regulatory agencies according to the ICH, OPPTS and OECD guidelines, to help bring your product to market, while ensuring safety for its intended use.

INSTEM — BOOTH #1

8 Tower Bridge
161 Washington Street, Suite 1550
Conshohocken, PA 19428
United States

Tel: (610) 941-0990
Fax: (610) 941-0992
E-mail: julie.jones@instem-lss.com
Web site: www.instem-lss.com

Instem offers Provantis Reproductive Toxicology & Foetal Pathology, a fully integrated solution for the reproductive toxicologist or teratologist. Provantis Repro supports all study types including ICH protocols, multigeneration, developmental toxicity, behavioural and developmental neurotoxicity studies.

Visit us at booth number 1 to find out more about our Reproductive Toxicology solution and the exciting new features now available in Provantis 8.

JOHN WILEY & SONS — BOOTH #4

111 River Street
Hoboken, NJ 07030
United States

Tel: (201) 748-6896
Fax: (201) 748-6142
E-mail: bbitetto@wiley.com
Web site: www.wiley.com

Founded in 1807, John Wiley & Sons, Inc., is an independent, global publisher of print and electronic products. Wiley specializes in scientific technical books, journals, textbooks and education materials. In addition to publishing *Birth Defects Research*, Wiley is known as the publisher of such valuable resources as *Current Protocols in Genetics*, the *Encyclopedia of Life Sciences*, *Embryos, Genes and Birth Defects*, 2nd Edition edited by Patrizia Ferretti, et al, and the *American Journal of Medical Genetics*. We are proud to publish *Birth Defects Research* on behalf of the Society.

NUMIRA BIOSCIENCES — BOOTH #2

2151 Michelson Drive
Suite 250
Irvine, CA 92612
United States

Tel: (949) 567-0920
Fax: (949) 756-8651
E-mail: tkato@numirabio.com
Web site: www.numirabio.com

Numira Biosciences is a specialty R&D tools company focused on leveraging advanced imaging technologies that provide researchers with unprecedented insights into genomics, developmental biology, mechanisms of disease, drug efficacy, and toxicity. Numira's microCT based Virtual Histology™ allows high resolution 3D visualization of soft tissue and skeletal features for simultaneous, nondestructive quantitative analysis.

PDS PRECLINICAL DATA SYSTEMS, INC. — BOOTH #6

100 Stierli Court
Suite 105
Mount Arlington, NJ 07856
United States

Tel: (973) 398-2800
Fax: (815) 642-4287
E-mail: info@PDS-America.com
Web site: www.PDS-America.com

The PDS PathData, ToxData and ReproData systems arm you with smart tools to help move your science forward efficiently with unmatched reliability and accuracy. Available in a traditionally licensed manner or as a 'pay-as-you-go' subscription basis. Power, flexibility, and repro-specific functions second to none.

SNBL USA, LTD. — BOOTH #12

6605 Merrill Creek Parkway
Everett, WA 98203
United States

Tel: (425) 407-0121
Fax: (425) 407-8601
E-mail: kmckee@snblusa.com
Web site: www.snblusa.com

SNBL USA is a preclinical contract research organization that specializes in nonhuman primate and small animal research. Study programs range from regulatory toxicology to customized study designs and disease models. Specialized programs include reproductive toxicology, safety pharmacology, immunotoxicology and carcinogenicity.

SNBL USA—Preclinical Services for Drug Development.

TERATOLOGY SOCIETY

PLATFORM SESSION ABSTRACTS

(Presenter designated by underlined author.)

Student/Postdoctoral Fellow Platform Session I

1

YAN J, HALES BF. McGill University, Montreal, QC, Canada. Is GAPDH a Sensitive Target for the Teratogen-Induced Oxidative Stress That Occurs Selectively in the Caudal Region of Organogenesis Stage Embryos?

Oxidative stress-induced reactive oxygen species (ROS) modify embryonic DNA, proteins and lipids and disrupt normal development. 4-HNE is an unsaturated small aldehyde and major lipid peroxidation end-product generated by ROS. 4-HNE is a highly diffusible electrophile that forms protein adducts, modifying their folding and function. 4-HNE protein adducts affect cell proliferation, differentiation, and apoptosis. *In utero* exposure to hydroxyurea (HU) depletes glutathione and induces a high incidence of hindlimb, lumbarsacral vertebral, and tail defects. In addition, HU treatment enhances 4-HNE-protein adduct immunoreactivity in caudal malformation-susceptible areas of exposed embryos. We hypothesize that the 4-HNE protein adducts formed in this oxidative stress susceptible tail region disrupt pattern formation. To test this hypothesis, CD1 mice received an ip injection of saline (control) or HU (600 mg/kg) on gestation day 9; embryos were excised 3 hr later and divided into head, body, and tail regions. Western blot analyses revealed that in control embryos 4-HNE-protein adduct formation was low in the head and body and significantly elevated in the tail. HU exposure only modestly affected 4-HNE-protein adduct formation in the head and body, but resulted in approximately a 3-fold increase in the tail region. Proteins modified by 4-HNE in the tail region were identified using 2D gel electrophoresis and mass spectrometric analysis. Interestingly, three of the identified proteins are involved in energy metabolism; these are glyceraldehyde-3-phosphate dehydrogenase (GAPDH), glutamate oxaloacetate transaminase 2 (GOT2), and aldolase 1, A isoform (ALDOA1). Strikingly, the HU-induced increase in 4-HNE conjugation to GAPDH not only decreased the amount of GAPDH detected (to 50% of control), but also altered its electrophoretic mobility, indicating a conformational change. In addition to its crucial role in glycolysis, GAPDH induces apoptosis during oxidative stress. The significantly higher production of 4-HNE-protein adducts in the tail regions of control and HU-exposed embryos may indicate an excess of ROS in this area. Furthermore, we propose that GAPDH represents a sensitive target for teratogen-induced oxidative stress during organogenesis. Funded by CIHR.

2

ELLIS-HUTCHINGS RG, ZUCKER RM, LAU CS, GREY BE, ROGERS JM. Reproductive Toxicology Division, NHEERL, ORD, US EPA, Research Triangle Park, NC, United States. Prenatal Origins of Hypertension Induced by Gestational Undernutrition or Environmental Chemical Exposure

Epidemiological studies have shown that babies of low birth weight have high blood pressure (BP) as children and adults, suggesting prenatal cardiovascular programming. This programming has been attributed to factors including undernutrition and maternal stress during pregnancy. Birthweight deficit-associated high BP has been recapitulated in gestationally undernourished and dexamethasone (Dex)-treated rats. We investigated the programming of high BP in rat offspring due to gestational undernutrition or exposure to diverse environmental chemicals. Pregnant rats were subjected to nutritional or chemical treatments previously demonstrated to induce slight maternal toxicity and/or a birthweight deficit: 50% undernutrition (GD 1-15 (UN1-15) or 10-21 (UN10-21)), Dex (0.2 mg/kg *s.c.*, GD 14-20), atrazine (Atz;125 mg/kg *p.o.*, GD 14-20), perfluorooctane sulfonate (PFOS;18.75 mg/kg *p.o.*, GD 2-6), perfluorononanoic acid (PFNA;5 mg/kg *p.o.*, GD 1-20), nicotine (Nic;6 mg/kg *s.c.*, GD 2-20) or arsenic (As;5 mg/kg *p.o.*, GD 1-20). Offspring of treated dams were fostered to untreated dams at birth. Control dams were treated with the corresponding vehicle, route and duration. Litters were standardized to 8-10 pups/litter at birth. Systolic BP (SBP) was measured at 10-11 and 26 weeks of age by tail cuff photoplethysmography. Nephron counts were conducted in day 22 kidneys using confocal microscopy and Imaris software. A birthweight deficit was evident in the UN10-21, Dex, Atz, PFOS and PFNA, but not in the UN1-15, Nic or As groups, with catch-up growth occurring by day 14. SBP in 10-11 week rats was increased in UN1-15, UN10-21, Dex and PFNA groups. In 26 week adult rats, SBP was increased in the UN1-15 and UN10-21 groups (Dex, Atz, PFOS, PFNA and As groups are not of age yet). Nephron counts were lower in the UN1-15 and UN10-21 groups. These results suggest that programming of BP in juvenile and adult rats can be altered by either prenatal undernutrition or environmental chemical exposure. We are currently completing nephron counts and glucocorticoid and renin-angiotensin-aldosterone system gene expression to elucidate the mechanisms by which prenatal programming of adult hypertension occurs. This abstract does not necessarily reflect EPA policy.

3

ROBINSON JF, YU X, HONG S, FAUSTMAN EM. University of Washington, Seattle, WA, United States. Examination of Dose and Time Dependent Arsenic and Cadmium-induced Gene Expression Response in C57BL/6 Mouse Embryos Undergoing Neurulation

Neural Tube Defects (NTDs) remain one of the most common birth defects due to a complex combination of known and unknown genetic and environmental factors. Comparative mouse studies indicate the C57BL/6 (C57) to be more sensitive to metals (Cadmium (Cd) and Arsenic (As)) than other inbred mouse strains when exposed during neurulation, displaying a higher incidence of metal-induced NTDs. Mechanistic studies suggest As and Cd may impact biological processes (i.e. cell cycle regulation, cell viability, folic acid metabolism) critical for neurulation. These observations, however, do not account for comparative analyses across dose and time which are crucial 1) to develop sensitive indicators of toxicity, 2) to further explore potential common and unique underlying mechanisms of NTD formation and 3) for risk assessment application. In this study, we investigated the dose- and time-dependent effects of As and Cd on gene expression using microarray (Affymetrix) in C57 embryos exposed *in utero* (GD8) across dose (As, 0-10mg/kg, Cd, 0-4mg/kg) and time (0, 8, 12h). We identified significantly altered genes due to treatment by ANOVA. We assessed for overrepresentation of Gene Ontology (GO) functional categories within significantly altered genes (MAPPFinder) with each metal. Finally, we calculated the average ratio in gene expression (As/Con or Cd/Con) within each altered GO category using GO-Quant, a GO-based application, which quantitatively describes dose- and time-dependent gene expression alterations. Our results suggest As and Cd induce dose and time-dependent gene expression alterations, representing common (cell cycle, macromolecule metabolic process) and unique (glycolysis, one-carbon metabolism (As only)) gene expression-linked GO biological processes. Furthermore, we demonstrate that the absolute magnitude in change associated with treatment within these subsets of genes increase in a dose and time dependent manner. In summary, we have identified As and Cd induced gene expression alterations in mouse embryos undergoing neurulation and associated quantitative changes within GO categories across dose and time to perturbations in neural tube closure and observed susceptibility in the C57 strain. NIEHS:5P30ES07033, 2P01ES09601, U10ES11387, NSF:0CE0434087.

4

BARDAI GK[1,2], HALES BF[2], SUNAHARA GI[1]. [1]National Research Council of Canada, Montreal, QC, Canada, [2]McGill University, Montreal, QC, Canada. Glyceryl Trinitrate (GTN): A Model Compound for Investigating the Mechanism of Nitro Based Developmental Toxicity

Exposure to nitro group chemicals increases the incidence of eye malformations. Embryo culture experiments have provided evidence correlating the redox potential of nitro compounds and the oxygen tension with microphthalmia, suggesting that it is the interaction of the nitro metabolite with macromolecules that leads to this malformation. Compounds without the nitro moiety did not cause microphthalmia. These data, and the current literature of nitrite signalling specificity, suggest an alternate hypothesis. We hypothesize that nitrite release, via enzymatic metabolism, causes ectopic aberrant signalling in the embryo at specific developmental times, leading to eye malformations. To test this hypothesis we have determined the effects of a well characterized nitro compound, GTN (nitroglycerine) in the quail embryo (*Coturnix coturnix japonica*) and identified the embryonic enzyme(s) capable of GTN metabolism. GTN (0, 1, 10 or 100 ug/ul) was injected in-ovo (n=10-11/group) at 0, 33 and 72h of embryonic development. There was a dose dependent effect on embryo lethality with non-specific, generalized malformations. This effect was decreased as observed by a right shift in the dose response curves at 33h and 72h. An increased incidence of microphthalmia was observed which peaked in the 33h treatment group (1 ug/ul: 20%; 10 ug/ul: 40%), decreasing at 72 h to 22% in the 10 ug/ul group. Histological examination of ocular tissue from affected individuals showed a thin and highly disorganized retinal pigment epithelium and retina, a thin neural retina and the absence of an optic nerve. GTN metabolism was inhibited by ethacrynic acid (50%), an inhibitor of glutathione-S-transferases (GST). Purified GST from the ocular region (K_m 0.84 mM; V_{max} 36 μM min^{-1}) or whole embryo (K_m 0.20 mM; V_{max} 30 μM min^{-1}) was capable of metabolising GTN to produce nitrite (34 and 1436 nmol min^{-1} mg^{-1}, respectively). These data demonstrate that GTN induces microphthalmia in the quail embryo. We propose that nitrite release from GTN via enzymatic metabolism may be a key initial step in the aberrant ectopic activation of cell signalling. Supported by an FRSQ studentship to G. Bardai, and the National Research Council of Canada.

5

LIANG C[1], OEST ME[1], JONES JC[1], PRATER MR[2]. [1]Virginia Polytechnic Institute and State University, Blacksburg, VA, United States, [2]The Edward Via Virginia College of Osteopathic Medicine, Blacksburg, VA, United States. Gestational High Saturated Fat Diet Alters C57BL/6 Mouse Skeletal Formation

Adult diets rich in saturated fat augment LDL cholesterol, elevate oxidative stress (OS), and increase risk of cardiovascular disease, obesity, cancer, and osteoporosis. However, the contribution of gestational high saturated fat diet (HFD) and OS to metabolic disease and skeletal dysfunction in perinates and adult offspring is not known. Animal models show deleterious effects of maternal HFD during pregnancy, including excessive OS, placental and vascular dysfunction, insulin resistance, and metabolic syndrome. Human children born of mothers consuming HFD during pregnancy are smaller at birth. Pathophysiologic mechanisms linking gestational HFD, OS, and insulin resistance to perinatal development and adult-onset skeletal and metabolic dysfunction are explored in the present study. Female C57BL/6 mice were fed "cafeteria-style" rodent diet (including 32.1% saturated fat to mimic a typical fast food menu) for one month prior to conception, and throughout gestation. Dam body weight (BW) increased from gestation day 0 (GD0) to GD19 by 41% with HFD, as compared to 23% in control dams; GD19 placental weight was 19% lower in HFD vs. control mice, due to OS-mediated cellular loss. HFD dams also developed insulin resistance (66% increase in plasma insulin and 27% increase in plasma glucose levels by GD10) as compared to control dams. Results of this study also demonstrate for the first time a marked reduction in GD19 perinatal bone mineral density (BMD; 20%), total bone volume (45%), and crown-to rump length (12%) in progeny of dams who consumed HFD, as compared to controls. Additionally, surviving offspring that were fed conventional rodent chow after weaning exhibited life-long effects of gestational HFD, including insulin resistance, obesity (3% greater BW in HFD vs. control offspring), lower femoral epiphyseal BMD (HFD offspring were 87% of control), and dysregulation of distal femoral trabecular architecture at 6 months of age, as measured by micro-computed tomographic image analysis. Collectively, these data suggest that offspring of dams who consume a diet rich in saturated fat during pregnancy are at increased risk of permanent skeletal malformation and adult-onset fragility fractures, as well as metabolic dysfunction (e.g., insulin resistance) in adult life.

6

HOSAKO H[1], MARTIN GS[1], BARRIER M[2], MIRKES PE[1]. [1]Texas A&M University, College Station, TX, United States, [2]U.S. Environmental Protection Agency, Research Triangle Park, NC, United States. Gene and miRNA Expression Differences in p53-Deficient Day-9 Mouse Embryos

Neural tube defects (NTDs) are one of the most common human birth defects, with a prevalence of approximately 1 in 1000 live births in the United States. In animal studies, deletion of p53 leads to a significant increase in embryos that exhibit exencephaly, with a high prevalence in female embryos. Whereas several studies have closely investigated the morphological changes of p53-deficient embryos, there is no study that has reported the molecular-level alternations in p53-deficient embryos. Here we attempt to identify genes and miRNAs modified by deletion of p53 allele in day 9 mouse embryos. Day 9 mouse embryos from p53 heterozygous crosses were collected, genotyped, and embryos of similar genotype (+/+; +/-; -/-) were pooled. RNA from pooled samples was isolated to determine mRNA expression levels using Codelink mouse cDNA microarrays and miRNA expression levels using Multiplex RT for TaqMan® MicroRNA assays. In p53-deficient embryos, 388 genes show statistically significant alteration in gene expression of more than 2 fold compared to p53-wildtype embryos. As expected, expression of p53 and well known p53 target genes, such as *p21* and *cyclin G1,* are significantly downregulated in p53-deficient embryos. In contrast, expression of other p53 target genes, such as *Noxa,* and *Puma,* are unchanged, suggesting that the expression of these p53 target genes can be regulated by transcription factors other than p53. We also identified six down-regulated genes (*Csk, Itga3, Jarid2, Prkaca, Rarg, and Sall4*) that are known to cause NTDs when they are deleted, indicating possible contribution of these genes to NTDs observed in p53-deficient embryos. In p53-deficient embryos, five miRNAs also show statistically significant alteration. Thus, our microarray and miRNA data begin to define the developmental role of p53, and have identified genes and miRNAs that may be involved in the mechanism of NTDs in p53-deficient mice.

7

WILLIAMS D[1], IRVIN EA[1], PUCKETT AM[2], RAYBOURNE RB[4], SMITH MA[1,3]. [1]Environmental Health Science Department, University of Georgia, Athens, GA, United States, [2]College of Veterinary Medicine, University of Georgia, Athens, GA, United States, [3]Center for Food Safety, University of Georgia, Athens, GA, United States, [4]Center for Food Safety and Applied Nutrition, U.S. Food and Drug Administration, Laurel, MD, United States.
Maternal and Fetal Tissue Infectivity Following an Oral Challenge With *Listeria monocytogenes* and an Anti-Internalin Peptide in Pregnant Guinea Pigs

Pregnant women are twenty times more likely to develop listeriosis than the general population and infection can result in abortion, stillbirth or neonatal illness. The objectives of this study were to use guinea pigs orally-challenged with *L. monocytogenes* to (1)assess fetal effects of maternal ingestion of *L. monocytogenes* at post-treatment (PT) days 2,6, 9 and 21 and (2)determine if a synthetic peptide, aimed at preventing *L. monocytogenes* invasion of intestinal cells by blocking the surface protein, internalin A, prevented infection in non-pregnant guinea pigs, fetal infection and/or stillbirths in pregnant guinea pigs. Guinea pigs were treated on gestation day 35 or 36 with doses ranging from 10^4 to 10^8 *L. monocytogenes* cfu. For the peptide study, animals were placed in three treatment groups and orally administered: A) In1a peptide (100µg/ml), B) 100µg/ml In1a peptide followed by 10^8 *L. monocytogenes* cfu one hour later, or C) 10^8 *L. monocytogenes* cfu preincubated with 100µg/ml In1a peptide. *L. monocytogenes* was isolated from maternal and fetal tissues as early as 2 days PT. All spleens and livers of dams treated with 10^4-10^8 cfu were positive for *L. monocytogenes* on PT days 2, 6 and 9. Of dams sacrificed on PT day 21, the numbers of positive livers from dams exposed to 10^6 and 10^8 cfu were significantly higher than controls or animals exposed to 10^4 cfu. On the remaining treatment days (day 6, 9, 21), as dose increased the number of placentas positive for *L. monocytogenes* increased. Preincubating *L. monocytogenes* with In1a peptide did not prevent *L. monocytogenes* invasion of the maternal and fetal tissues. *L. monocytogenes* was isolated from 100%, 44%, 38% and 19% of the maternal livers and spleens, placentas, fetal livers, and fetal brains, respectively. Of guinea pigs exposed to *L. monocytogenes* 1 hour following the peptide (B), *L. monocytogenes* was isolated from maternal liver and spleen, but not from the placentas or fetuses of this group. Current data suggest that when administered to pregnant guinea pigs prior to *L. monocytogenes* exposure, In1a peptide may reduce the occurrence of fetal infection and stillbirths. Funds provided by the American Meat Institute Foundation and the Center for Food Safety.

8

GALDONES E, HALES BF. Department of Pharmacology and Therapeutics, McGill University, Montreal, QC, Canada. Localized Application of Growth Differentiation Factor-10 (Gdf10) Alters Morphogenesis of the Developing Limb Bud *In Vitro*

Limb development is a complex process involving the regulation of intricate signals that control three-dimensional patterning. Vitamin A derivatives modulate gene expression through retinoic acid and rexinoid receptor heterodimers; these are indispensable for limb development. Retinoid excess has been associated with the misregulation of developmental genes. Previous work in our laboratory has identified Gdf10/Bone morphogenetic protein 3b (Bmp3b) as a gene that is significantly upregulated following retinoid insult. Gdf10 shares 81% homology to the ligand domain of Bmp3a (an inhibitor of bone development) but the role of Gdf10 in the limb is not well characterized. We hypothesize that Gdf10 is an important mediator of normal and retinoid-induced abnormal limb development. The goal of this study was to examine how localized exposure to GDF10 affects limb morphogenesis. To test this hypothesis, pregnant CD-1 mice were euthanized on gestational day 12.5 and forelimbs excised. Affi-gel blue beads were soaked in recombinant human GDF10 (rhGDF10; 50 µg/ml) and surgically implanted either in the interdigital web between digits II and III or within digit III itself (ray). Limbs were cultured for 6 days *in vitro;* cartilage was stained with 0.01% toluidine blue and gross morphology qualitatively and quantitatively assessed. Control limbs developed normally, with proper long bone anlagen, carpalia and digit differentiation (limb score: 208±3). Control PBS-soaked beads implanted in the web (200±4) or ray (210±6) had no detrimental effect on limb development. While rhGDF10-soaked beads located in the ray had minor effects on limb score (177±6), beads implanted in the web severely compromised carpalia and proximal long bone anlagen differentiation (143±9), without affecting hand plate development. Thus, our results illustrate that localized application of rhGDF10 affects limb morphogenesis. Since the location of rhGDF10-beads is distal, it is intriguing that only proximal structures are affected, uniquely when the protein is present in the webbing. Identifying the molecular mechanisms controlling the location-specific actions of GDF10 will be crucial for understanding its role in normal and retinoid-induced abnormal limb development. Funded by CIHR.

9

CURRAN CP[1,2], WILLIAMS MT[3], VORHEES CV[3], PATEL KV[2], NEBERT DW[2]. [1]CDC-NIOSH, Cincinnati, OH, United States, [2]University of Cincinnati, Cincinnati, OH, United States, [3]Cincinnati Children's Research Foundation, Cincinnati, OH, United States.
Genetic Susceptibility to PCB-Induced Developmental Neurotoxicity

Polychlorinated biphenyls (PCBs) are widespread persistent organic pollutants linked to numerous human health problems, including learning and memory deficits in children of exposed mothers. PCBs exist in the environment as complex mixtures (209 possible congeners). Both coplanar and non-coplanar PCBs are reported to have neurotoxic effects in animal studies, but individual congeners do not always produce the same effects as PCB mixtures. We developed a mixture of 3 planar and 5 non-coplanar PCBs to model developmental human exposures. Using a mouse model that mirrors human variation in two genes associated with PCB metabolism (the aryl hydrocarbon receptor and CYP1A2), we hypothesized that genetic differences would lead to differential susceptibility and resistance following developmental PCB exposure. Specifically, we tested the hypothesis that *Ahr^{d}Cyp1a2(+/+)* mice with a poor-affinity AHR and a functioning CYP1A2 enzyme would be most resistant while *Ahr^{b}Cyp1a2(-/-)* mice with a high-affinity AHR and no CYP1A2 enzyme would be most susceptible to PCB-induced developmental neurotoxicity. We predicted that a third line of mice, *Ahr^{b}Cyp1a2(+/+)*, would show an intermediate phenotype. Pregnant dams were treated at gestational day 10 (GD10) and again at postnatal day 5 (PND5) with either the PCB mixture or the corn oil vehicle to insure exposure during early central nervous system development. We tested hippocampal-dependent spatial and non-spatial learning and memory in exposed offspring at PND60. We found the most striking deficits in learning and memory in *Ahr^{b}Cyp1a2(-/-)* mice with significant impairments in Novel Object Recognition, significantly increased latency in Morris Water Maze Cued Platform tests, and a significantly increased failure rate in three phases of Morris Water Maze Hidden Platform testing. *Ahr^{d}Cyp1a2(+/+)* mice showed no deficits in learning and memory compared with corn oil-treated control animals. We conclude that hepatic CYP1A2 is protective against learning and memory deficits in offspring exposed to a mixture of coplanar and non-coplanar PCBs. Because CYP1A2 sequesters planar, but not non-coplanar congeners, these findings also implicate coplanar PCBs as an essential element of PCB-induced neurotoxicity.

Platform Session II

Diabetes in Pregnancy: Mechanisms and Outcomes

10

ADAM MP[1], HUDGINS L[2], CAREY JC[3], HALL BD[4], COLEMAN K[1], PEREZ-AYTES A[5], GRAHAM, JR. JM[6]. [1]Emory University, Atlanta, GA, United States, [2]Stanford Medical Center, Palo Alto, CA, United States, [3]University of Utah Medical Center, Salt Lake City, UT, United States, [4]University of Kentucky Medical Center, Lexington, KY, United States, [5]Hospital Universitario Infantil La Fe, Valentia, Spain, [6]Cedars-Sinai Medical Center, Los Angeles, CA, United States. Tibial Hemimelia With Preaxial Hallucal Polydactyly in Infants of Diabetic Mothers

Tibial hemimelia with preaxial hallucal polydactyly is a distinctive rare congenital malformation in infants of diabetic mothers (IDMs). This syndrome was first reported by Carey et al. [1990] in 6 infants, 5 of whom had proximal implantation of the great toe. Here we report 9 new cases in addition to the 6 previous reported cases. Of these 9 new cases, all had preaxial hallucal polydactyly. In 8/9 patients the digit was proximally placed. Tibial hemimelia was documented in 7/9 cases. Martinez-Frias et al. [1992] found a high risk for preaxial polydactyly in IDMs (OR:24.60; 95% CI 4.68–82.14) in a Spanish population-based epidemiological study. Slee and Goldblatt [1997] reported another case of an IDM with proximal placement of an extra hallux, congenital hip dysplasia and vertebral anomalies, and Frias et al. [2007] recently confirmed this association in IDMs. In many of our recent cases, hip dysplasia, vertebral anomalies, clubfoot, and small dysplastic ears with deficient cartilage are part of this condition in IDMs. The lower limb defects are usually asymmetric and the limb shortening may be either tibial or femoral. This condition should be added to other distinctive limb defect conditions associated with diabetic embryopathy, such as sacral dysgenesis and femoral hypoplasia-unusual facies.

11

CORREA A[1], GILBOA SM[1], BOTTO LD[2], MOORE CA[1], HOBBS CA[3], CLEVES M[3], COLARUSSO T[1], WALLER DK[4], REECE EA[5]. [1]CDC, NCBDDD, Atlanta, GA, United States, [2]University of Utah, Salt Lake City, UT, United States, [3]University of Arkansas, Little Rock, AR, United States, [4]University of Texas, Houston, TX, United States, [5]University of Maryland, Baltimore, MD, United States. Does Periconceptional Use of Vitamin Supplements Containing Folic Acid Attenuate the Risk for Diabetes-Associated Birth Defects?

Hyperglycemia resulting from pregestational diabetes mellitus (PGDM) is a known human teratogen. We used data from the National Birth Defects Prevention Study (1997–2003) to explore whether periconceptional use of vitamin supplements containing folic acid attenuated the risk for birth defects associated with PGDM. All data were self-reported during maternal interviews. PGDM was defined as types 1 or 2 diabetes diagnosed before the index pregnancy. Periconceptional vitamin use was defined as any use of a multivitamin, prenatal vitamin, or single vitamin supplement containing folic acid during the month before conception or daily use during the first month of pregnancy. The analysis included 10,292 cases and 3,874 controls. Cases were categorized into 30 non-cardiac phenotypes and 31 cardiac phenotypes for analysis. Multivariable logistic regression modeling was used to estimate adjusted odds ratios (OR) and 95% confidence intervals (CI). PGDM was diagnosed in 2.2% of case mothers and 0.5% of control mothers; 43% of both case and control mothers reported use of vitamin supplements containing folic acid. PGDM was associated with an elevated risk for 16 out of 30 non-cardiac defects, and 24 out of 31 cardiac defects. For 11 out of 16 non-cardiac defects and for 13 out of 24 cardiac defects the elevated risk was limited to offspring of mothers with PGDM who did not use vitamin supplements. In the absence of periconceptional use, PGDM was associated with an elevated risk for all non-cardiac defects combined (OR=5.05, CI 2.65-9.61) and all cardiac defects combined (OR=7.03, CI 3.72-13.29). Vitamin supplementation attenuated PGDM-associated risks for non-cardiac defects by 51% (OR=2.45, CI 1.03-5.79) and by 33% for cardiac defects (OR=4.81, CI 2.31-10.90). These findings suggest that periconceptional use of vitamin supplements containing folic acid might attenuate but not eliminate the risk for PGDM-associated birth defects.

12

ORNOY A, BISHITZ N, RAND S. Hebrew University Hadassah Medical School, Jerusalem, Israel. The Interrelation of Hyperglycemia, Hypoxia, and Oxidative Stress in Diabetes-Induced Embryopathy in Rats

Introduction: Increased embryonic oxidative stress is considered to be a major mechanism involved in diabetic embryopathy. Several studies have shown that hypoxia, a well known teratogen, can also increase oxidative stress. We were interested to study the interrelationship between hyperglycemia, hypoxia and oxidative stress in the pathogenesis of diabetes-induced anomalies. Methods: 10.5 day old embryos of "Sabra" rats were cultured for 28hr in culture medium with different glucose levels (2.4, 5, 7 and 9 mg/ml) or with 10% or 15% oxygen. The embryos were then examined for growth and anomalies. The degree of oxidative stress was examined by studying lipid peroxidation products (Malondialdehyde-MDA) and the antioxidant capacity was examined by studying the levels of low molecular weight antioxidant (LMWA) and the activity of the antioxidant enzymes Superoxide Dismutase (SOD) and Catalase like enzymes (CAT). The degree of hypoxia and of oxidative stress was also assessed by immunohistochemistry from paraffin embedded sections using 4 different antibodies: Hypoxia Inducible Factor 1 α (HIF-1α - a marker for hypoxia), nitrotyrosine (a marker for oxidative stress), NFkB and IkB. Results: High glucose or reduced oxygen decreased embryonic growth and induced a high rate (up to 50%) of anomalies (NTD's, small brains and/or cardiac malformation). The damage was highest with 7 mg/ml glucose and with 10% oxygen. The malformed embryos showed significant increased activity of CAT, increased levels of LMWA and of MDA compared to controls. SOD activity was increased only in the malformed embryos cultured in hyperglycemic medium. In the embryos without anomalies cultured under the same conditions, all of these changes were less significant. Preliminary immunohistochemical studies showed an increase in HIF-1α, nitrotyrosine and NFkB in the embryos and yolk sacs cultured under abnormal conditions. Conclusions: Both high glucose levels and hypoxia increased embryonic oxidative stress, up-regulated the antioxidant defense mechanism and increased the biochemical and intracellular markers for hypoxia, oxidative stress and NFkB. It can be assumed that both hypoxia and hyperglycemia are interconnected and may similarly contribute to the embryonic damage. We are now studying the molecular mechanisms underlying these findings. Supported by grant number 039-4193 from the Israel Science Foundation.

13

YANG P, ZHAO Z, REECE EA. Department of Obstetrics, Gynecology & Reproductive Sciences, University of Maryland School of Medicine, Baltimore, MD, United States. Apoptosis Signal-Regulating Kinase 1 (ASK1) Involves in Maternal Diabetes-Induced Neural Tube Defects (NTDs)

Our pharmacological and genetic evidence strongly implicate c-Jun N-terminal kinase 1 and 2 (JNK1/2) activation as an indispensable mediator in the induction of diabetic embryopathy. However, the mechanism of JNK1/2 activation in diabetic embryopathy is unknown. In the present study, we aim to determine the JNK kinase kinase (JNK3K) responsible for maternal hyperglycemia-induced JNK1/2 activation, and subsequently to investigate the involvement of this JNK3K in the induction of diabetic embryopathy. To identify the JNK3K responsible for JNK1/2 activation under maternal diabetic conditions, phosphorylated levels of the three known JNK3Ks (ASK1, TAK1 and MLK3), were determined in neural tubes from normally developed E11 embryos from non-diabetic control (NC) or diabetic mice (N-DM), and in neural tubes of malformed E11 embryos of diabetic mice (M-DM). The level of p-ASK1 was increased in neural tubes of M-DM embryos compared to levels in neural tubes of NC or N-DM embryos, while p-TAK1 and p-MLK3 levels were unchanged. This strongly suggests that ASK1 is the JNK3K that mediates hyperglycemia-induced JNK1/2 activation. To test whether ASK1 deficiency abrogates maternal hyperglycemia-induced JNK1/2 activation, levels of p-JNK1/2 were determined in E9 embryos of WT non-diabetic control (WT-NC), WT diabetic (WT-DM) and ASK1KO diabetic mice (ASK1KO-DM). Levels of p-JNK1/2 in embryonic samples from ASK1KO-DM were similar to those in WT-NC embryos but were lower than those in the WT-DM group. Thus, ASK1 deficiency in ASK1KO mice abolished maternal hyperglycemia-induced JNK1/2 activation. Consistent with the above findings, our preliminary studies show prevention of maternal diabetes-induced NTDs in ASK1 deficiency mice. In 19 embryos from four ASK1KO diabetic mice, the average malformation rate was 4.17%. This malformation rate was significantly lower than that in embryos from WT diabetic mice (25.4 %) and was not significantly different from the non-diabetic WT control group. The results of the studies provide strong and indeed compelling evidence that maternal diabetes-induced ASK1 activation leads to JNK1/2 activation, and ASK1 is critically involved in the induction of diabetic embryopathy.

14

SMELSER DT[1], MOORE CA[1], OLNEY RS[1], CRIDER KS[1], REEFHUIS J[1], BOTTO LD[2], DRUSCHEL CM[3], ROMITTI PA[4]. [1]Centers for Disease Control and Prevention, Atlanta, GA, United States, [2]University of Utah, Salt Lake City, UT, United States, [3]New York State Department of Health, Troy, NY, United States, [4]University of Iowa, Iowa City, IA, United States. Epidemiological Study of Risk Factors for VATER Association: Data from the National Birth Defects Prevention Study 1997-2003

Introduction: The acronym 'VATER' was proposed in the early 1970's to describe a pattern of multiple congenital anomalies that includes anomalies of the axial skeleton, radial ray, kidney, upper and lower gastrointestinal tract, and heart. VATER association is almost always sporadic and is likely etiologically heterogeneous. We report results of a study that examined multiple potential risk factors for VATER association. Methods: We used data from the National Birth Defects Prevention Study (1997–2003), a multi-center, population-based, case-control study to examine associations between VATER association and a number of factors, including maternal conditions (diabetes, BMI, fever, infections), alcohol use, smoking, folic acid containing supplements, maternal infertility treatments, and study center. For these analyses, VATER association was defined as the presence of three or more major malformations in defect groups within the VATER spectrum. Potential cases were identified by coded defects, reviewed by two dysmorphologists, and assigned into groups with core VATER defects. 120 case and 5008 control infants were available for analysis. Crude and adjusted odds ratios (OR) and 95% confidence intervals (CI) were estimated using logistic regression. Results: Crude associations were observed between VATER and infertility treatments (OR=5.2, 95% CI=2.8,9.7) and twinning (OR=6.4, CI=3.8,10.6). Therefore we excluded the fertility treated group from the remainder of the analyses. Controlling for first pregnancies and study center, there was an association between VATER and twinning with adjusted OR [aOR] of 5.6 (2.8,11.2) and pregestational type 1 or 2 diabetes with aOR and 95% CI of 12.0 (4.4, 32.6). Discussion: This report is the first large scale epidemiological study of risk factors for VATER association. These findings support the previous clinical observations that the VATER phenotype is associated with maternal diabetes and twinning. The postulated pathogenesis of VATER association as a non-specific disruption in differentiating mesoderm in early embryologic development may be consistent with complex metabolic or morphogenetic processes such as diabetes or twinning; however, further evaluations are warranted to determine the basis for these associations.

15

KAPPEN C[1], KRUGER C[1], PAVLINKOVA G[2], SALBAUM JM[1]. [1]Pennington Biomedical Research Center/LSU, Baton Rouge, LA, United States, [2]University of Nebraska Medical Center, Omaha, NE, United States. Birth Defect Risk in Diabetic Pregnancy: Implications of Altered Gene Expression in Embryo and Placenta

Maternal diabetes during pregnancy increases the risk for congenital malformations, particularly cardiovascular malformations, neural tube defects and caudal dysgenesis. In a mouse model of diabetic pregnancy, we have shown previously that the metabolic imbalance in diabetic pregnancy is associated with deregulation of gene expression in the developing embryo. Although overall, only a limited number of genes is affected by maternal diabetes, a sizeable fraction are already known to be required for proper embryonic development. Consistently, embryos reared in diabetic pregnancies are smaller, but do not exhibit evidence of any developmental delay. This prompted us to consider the role of the placenta as the conduit for nutritional supply to the embryo, and impaired placental function could also contribute to risk for birth defects. Gene expression studies by microarrays have identified several promising candidate genes, which were validated by quantitative RT-PCR. We are currently investigating how these genes are mis-regulated by maternal diabetes, and how they play a role in regulating embryonic growth and the placental or embryonic responses to maternal diabetes.

Gene Expression and Genomics

16

DASTON GP, OVERMANN GJ, CARR GJ, TIESMAN JP, NACIFF JM. Procter & Gamble, Cincinnati, OH, United States. Gene Expression Profile Induced by Testosterone in the Fetal Rat Testis

Global analysis of gene expression by microarray has proven to be a valuable tool in elucidating mode of action of exogenous agents, and may have utility in predicting toxicity of untested agents. Our lab has been identifying the changes in gene expression in developing reproductive organs after transplacental exposure to sex steroids. We have found that estrogens produce a characteristic pattern of gene expression in the fetal rat testis. We conducted this study to determine the effects of testosterone on gene expression and to compare it with estrogens. Pregnant female Sprague Dawley rats (at least 8/group) received sc injections of 0, 1.5, 3 or 10 mg/kg/day testosterone propionate on gestation days 11-20 and were sacrificed 2 hours after the last injection. Testes were obtained from euthanized male fetuses and placed in RNALater. All testes from a litter were pooled. RNA was isolated from the testes, processed into biotin-labeled cRNA and RNA from 6 litters per group hybridized to Affymetrix rat arrays. All doses of testosterone caused a decrease in maternal weight gain and fetal weight and an increased resorption rate. Although there were several hundred genes that were significantly changed in expression at one or more dose levels, the most rigorous statistical analysis (significant dose-related trend, $p<0.001$, and fold change of at least 1.4) indicated that the gene expression profile for testosterone consists of 24 genes. Several of these are in the steroid biosynthetic pathway (e.g., cyp17, Star; Scarb1,), these were downregulated. We observed downregulation of the same set of genes after estrogen treatment. Fourteen genes were upregulated, and not in common with the estrogen profile: these included growth factors (e.g., glioma-derived vascular endothelial growth factor), the GnRH receptor, membrane transporters and calcium regulatory proteins. The uniqueness of the identified profile will have to be verified with other androgens. The fact that the profile is smaller than one identified for estrogens in the testis, using the same statistical criteria, suggests that gestation day 20 may not be the most active period of androgen-mediated gene expression but is convenient in that it allows for the evaluation of gene expression at the same developmental stage that most morphological assessments are done. Subsequent research in our lab will determine whether the transcript profile can be recapitulated *in vitro* in an androgen-receptor-expressing cell type.

17

IVELL RA[2], IVELL R[2], DRISCOLL D[1], MANSON JM[1]. [1]University of Pennsylvania, Philadelphia, PA, United States, [2]University of Adelaide, Adelaide, Australia. INSL3 Levels in Amniotic Fluid of Human Fetuses

Introduction: Rodent studies suggest that the peptide hormone Insl3 made by the fetal testis is responsible for the first transabdominal phase of testicular descent, and may be affected by xenobiotics that disrupt male reproductive tract development. To date there is no information on the production of INSL3 by the human fetus in mid-gestation. The objective of the present study was to determine the concentrations and time-course during pregnancy of INSL3 and testosterone production in human fetuses and their associations with maternal characteristics, pregnancy complications and outcome. Methods: This was a retrospective cohort study in which women who contributed amniotic fluid specimens to a bank from 2003-2006 were followed to determine their pregnancy complications and pregnancy outcome. Amniotic fluid specimens were collected from the Reproductive Genetics Laboratory of the Hospital of the University of Pennsylvania subsequent to routine amniocentesis. INSL3 and total testosterone levels were measured in amniotic fluid by validated immunoassays and correlated with maternal characteristics, pregnancy complications and outcomes. Results: INSL3 was only detectable in amniotic fluid from male fetuses, and highest levels occurred from weeks 15-17 of gestation. INSL3 concentration was positively associated with increased birth weight, the occurrence of pre-eclampsia and advanced maternal age, but not with testosterone levels. Discussion: INSL3 concentration in human amniotic fluid is potentially predictive of fetal sex and pre-eclampsia, and presumably reflects the functioning of the fetal Leydig cell population.

18

STRECK RD, KUMPF SW. Developmental & Reproductive Toxicology, Pfizer Global R & D, Groton, CT, United States. Evaluation of MicroRNAs as Markers of Development Toxicity

We characterized developmental and drug-induced changes in microRNA (miRNA) expression in order to develop a high-throughput developmental toxicity assay based on miRNA "sensor" technology. First, we used multiplexed human and mouse Taqman MiRNA Assays (Applied Biosystems) to screen mouse embryonic stem cells (ESCs) for identification of miRNA species that are enriched in the undifferentiated state. Approximately 350 miRNA species were screened for relative abundance in: undifferentiated mouse ESCs; mouse ESC embryoid bodies at 3, 5 and 10 days of differentiation *in vitro*; Gestation Day 12 mouse embryos; and adult mouse heart. Only a handful of miRNA species were present in undifferentiated ESCs at higher abundance than in differentiating or terminally differentiated cells. Our findings agree with reports showing mouse (and human) ESC-specific miRNAs mainly being transcribed from 2 gene clusters: the miR-290 cluster and the miR-302/367 cluster. In our current mouse ESC assay for estimating the potential of a compound to cause developmental toxicity, compounds are tested for effects on ESC viability and differentiation after 10 days of exposure. Most teratogens impair functional mouse ESC differentiation and alter expression of mRNA transcripts characteristic of pluripotent and differentiated cell types, causing a dose-dependent shift to a "less differentiated" mRNA expression profile. In pilot experiments that involved exposing mouse ESCs to methotrexate or valproic acid during the first 3 days of differentiation, significant changes in expression of the miRNAs from both clusters occurred, causing a dramatic dose-dependent shift to a less differentiated miRNA expression profile. We have extended these studies to 20 additional compounds. In addition, we have constructed sensor reporter vectors which generate luciferase transcripts containing copies of a specific miRNA target sequence; this allows the level of the corresponding miRNA to be measured based on a decrease in luminescence. Currently, we are using these sensors to develop a novel high-throughput 96 well plate-based assay for predicting developmental toxicity. This assay should be rapid (3-days), sparing of compound, animals, and labor, and the output would be read on a standard luminometer.

19

SALBAUM JM[1], FINNELL RH[2], KAPPEN C[1]. [1]Pennington Biomedical Research Center, Baton Rouge, LA, United States, [2]Texas Institute for Genomic Medicine, Houston, TX, United States. Regulation of Folate Receptor 1 Expression in the Yolk Sac

The supply of nutrients to the developing mammalian embryo is a fundamental requirement to enable cell proliferation. After implantation, it is initially the visceral endoderm, and later the yolk sac, that perform the task of nutrient transport to the embryo. Finally, with the establishment of blood vessels and development of the chorioallantoic placenta, the embryo switches from histiotrophic to haemotrophic nutrition. How genomic regulatory mechanisms are integrated with this developmental regimen is largely unknown. We have found that visceral endoderm cells express Folate receptor 1, a high-affinity receptor for the essential micronutrient Folic acid. This expression is consistent with the visceral endoderm mediating nutrient uptake and transport, and suggests that the visceral endoderm has an important function for Folate transport to the embryo. Since Folr1 - an essential gene for embryonic development - appears to be the only member of the Folate receptor gene family that is expressed in the visceral endoderm, we conclude that the *FOLR1* protein represents the gateway for this important micronutrient through the visceral endoderm to the embryo itself. Therefore, the mechanism that controls the specific expression of Folr1 in the visceral endoderm is essential to ensure adequate Folate supply to the embryo. In order to understand this mechanism, we have initiated a search for regulatory elements for the human FOLR1 gene. Utilizing reporter gene assays in a cell culture model for visceral endoderm as well as in transgenic mice, we have discovered a DNA sequence with transcriptional enhancer function that is located upstream of the human FOLR1 gene. This enhancer activates transcription from the P4 promoter of the human FOLR1 gene in F9 cells differentiated towards a visceral endoderm phenotype, and is capable to direct reporter gene expression to the yolk sac in transgenic mouse experiments *vivo*, in a pattern similar to the expression of Folr1 itself. Since this sequence is sufficient to mediate reporter gene expression in the visceral endoderm, we conclude that this enhancer represents an important part of the regulatory mechanism that controls FOLR1 gene expression and in turn provides Folate to the developing embryo.

20

EULING SY[1], MAKRIS S[1], SEN B[2], WHITE L[2], BENSON R[3], GAIDO KW[4], KIM AS[1], HESTER S[5], WILSON VS[5], KESHAVA C[1], KESHAVA N[1], FOSTER PM[6], ANDROULAKIS IP[7], OVACIK M[7], IERAPETRITOU MG[7], GRAY, JR. LE[5], THOMPSON C[1], CHIU W[1]. [1]NCEA, US EPA, Washington, DC, United States, [2]NCEA, US EPA, Research Triangle Park, NC, United States, [3]Region 8, US EPA, Denver, CO, United States, [4]The Hamner Institute, Research Triangle Park, NC, United States, [5]NHEERL, US EPA, Research Triangle Park, NC, United States, [6]NIEHS, Research Triangle Park, NC, United States, [7]ebCTC, Rutgers/UMDNJ, Piscataway, NJ, United States. An Approach to Using Genomics Data in Risk Assessment: Dibutyl Phthalate (DBP) Case Study

An approach for incorporating genomics data into U.S. Environmental Protection Agency (EPA) risk assessment was developed and a case study for dibutyl phthalate (DBP) and male reproductive developmental effects was performed. The approach includes: 1) identifying focal questions that the genomics dataset may address; 2) evaluating the genomics and toxicity datasets in conjunction to inform mode of action (MOA) and interspecies extrapolation; and 3) reanalyzing the microarray data, when available. For DBP, reduced fetal testicular testosterone production and insl3 gene expression are two previously described MOAs that explain many of the male reproductive developmental effects observed after *in utero* exposure in rats, but additional modes of action may be operative. The male reproductive developmental toxicology dataset was assessed for low incidence findings and endpoints without a known MOA. Eight microarray or real-time reverse transcriptase-polymerase chain reaction (RT-PCR) rat studies as well as other expression studies comprised the DBP genomics dataset. A weight-of-evidence evaluation of the dataset indicated that the differentially expressed genes and direction of effect were fairly consistent across microarray studies and all expression studies. Reanalysis of one microarray study of the testis identified additional pathways in biological processes including cell signaling, cell adhesion, growth and differentiation. These pathways may be affected in the testis after *in utero* exposure to DBP and are potentially associated with formation of multinucleated germ cells or other outcomes currently lacking a known MOA. A comparison of two analytical methods revealed unique and common pathways, indicating that results depend in part on method selection. Research needs for genomics studies for risk assessment include time-course studies with dosing earlier in the critical period of development to inform a regulatory network model and multiple dose studies to address toxicokinetics and dose-response. This approach for utilizing genomics data in risk assessment may be used as a prototype for other chemical assessments. Disclaimer: The views expressed are those of the authors and do not represent the policies and/or endorsement of the U.S. EPA.

Joint TS/OTIS Platform Session III

Chronic Maternal Diseases and Effects of Their Treatment

21

ANDERKA MT[1], LIN AE[2,1], ABUELO D[3,4], MITCHELL AA[5]. [1]Massachusetts Department of Public Health, Boston, MA, United States, [2]Massachusetts General Hospital, Boston, MA, United States, [3]Rhode Island Hospital, Providence, RI, United States, [4]Hasbro Children's Hospital, Providence, RI, United States, [5]Slone Epidemiology Center at Boston University, Boston, MA, United States. Mycophenolate Mofetil Embryopathy: A Recognizable Phenotype

Background: Mycophenolate mofetil (MMF) (CellCept®) is an immunosuppressant used to prevent rejection in patients with solid organ transplants (usually kidney) and to treat autoimmune conditions such as lupus nephritis. Use of MMF in pregnancy is not recommended (FDA drug category D) because of its teratogenicity in rats and rabbits. Since 2001, reports of malformations in 10 offspring exposed to MMF in pregnancy have raised concern that MMF is a human teratogen. We report another patient and delineate what we believe is the recognizable phenotype of the MMF embryopathy. Case Report: This was the first pregnancy for a 19 yo mother (and 22 yo father) who had been treated for lupus nephritis with MMF (1 g BID) prior to conception to 12 weeks gestational age. Additional medications included prednisone, lisinopril, plaquenil, prenatal multivitamins, calcium, vitamin D and iron. She was positive for CMV. She delivered a liveborn male at 31 weeks by vaginal delivery who weighed 980 gm. He had bilateral moderate-severe microtia, external auditory canal atresia (EACA) and bilateral conductive deafness. Prior to awareness about MMF exposure, oligonucleotide array was performed which showed a paternally inherited duplication 12p13.2. Results: Of 11 MMF-exposed mothers (10 literature, 1 new), the underlying maternal condition was lupus nephritis without transplant (4, 36%), and kidney transplantation (7, 64%). In 10/11 (91%) timing of MMF use was known and included early pregnancy. All received additional immunosuppressive drugs, none of which is known to be teratogenic. Most (6/8, 75%) were premature; 3 were terminations of pregnancies. The most distinctive malformation was moderate-severe microtia (10/11, 91%), with EACA (7/10, 70%). Other malformations included cleft lip/palate (5, 45%), heart defect (conotruncal or aortic arch) (4, 36%), hypertelorism (3, 27%) hypoplastic nails (2, 18%) and retinal coloboma (2, 18%). The dose was known in 10/11 cases; it was 1gm or more/day in 5 and <1 gm/day in 5; there was no observed correlation between dose and phenotype. Conclusions: Although caution is needed when early case reports associate a drug exposure with malformations, there is sufficient evidence to link MMF exposure to an embryopathy with a recognizable phenotype.

22

NULMAN I[1,2], SGRO M[1,2], BARRERA M[1,2], CHITAYAT D[1,2], CAIRNEY J[3,1], KOREN G[1,2]. [1]The Hospital For Sick Children, Toronto, ON, Canada, [2]University of Toronto, Toronto, ON, Canada, [3]Centre for Addiction and Mental Health, Toronto, ON, Canada. Pregnancy Outcome and Cognitive Development of Children Exposed *In Utero* to Cyclosporine Following Maternal Renal Transplant

Purpose: Cyclosporine is among the most common immunosuppressive therapies used to prevent organ transplant rejection. Its reproductive safety, including long-term neurodevelopmental effects on exposed children, must be assessed. The present objective was to evaluate perinatal outcomes and children's long-term neurocognitive development following exposure to cyclosporine for maternal renal transplant. Methods: This cohort study with matched controls used a prospectively collected database and maternal interviews to document pregnancy outcomes. Validated standardized psychological tests assessed the neurocognitive achievements of exposed and unexposed children. Results: 39 exposed children were assessed (15 single pregnancies; 11 repeated pregnancies with two or three children) and compared to 38 matched unexposed children. Renal transplant children were exposed to immunosuppressive (cyclosporine, azathioprine, prednisone), anti-hypertensive and anti-bacterial substances. 33.3% of exposed children were born prematurely with low birth weights, high rates of perinatal complications and instrumental deliveries versus 0.5% in unexposed controls. There were no significant differences in Full-Scale IQ between exposed and unexposed groups (104.46 vs 109.00, p=0.157) or between children of single and repeated pregnancies (108.27 vs 102.08, p=0.162). Premature-low birth weight children had statistically and clinically significant lower scores than controls (98.46 vs 109.00, p=0.049). Discussion: Although cyclosporine does not appear to affect children's long-term cognitive abilities, maternal renal transplant, associated comorbidity, and perinatal complications may adversely impact child outcome. Proper management of maternal morbidity and improved obstetric care may significantly improve child's neurocognitive performance. Support provided by HSC and Novartis.

23

WEBER-SCHOENDORFER C. Pharmokovigilanz- und Beratungszentrum, Embryonaltoxikologie, Berlin, Germany.
Multiple Sclerosis – Effects of Immunomodulatory Therapy on Pregnancy Outcome: An Observational Study of the Teratology Information Service Berlin, Germany

Background: Multiple sclerosis (MS) often occurs in women of child-bearing age. Relapse-rate does not increase during pregnancy, during the third trimester the risk is even lower. Interferon beta-1b, interferon beta-1a or glatiramer are used to prevent relapses. Experience with these disease-modifying therapies during pregnancy is still limited. Methods: This is an observational comparative study of pregnancies prospectively ascertained between 1995 and 2007. Pregnant women or their physicians who sought advice from the Berlin Teratology Information Service regarding the safety of glatiramer (GA; n=27) or beta-interferons ((IFNβ; n=62) were enrolled using a structured questionnaire. In all subjects IFNβ or GA were taken at least during the first trimester. They were compared to 1) pregnant women with multiple sclerosis who did not take GA or IFNβ (n=63); 2) to pregnant women without MS (n=1557) exposed to harmless substances. Spontaneous abortion rate, major birth defects, preterm birth, and birth weight among the four cohorts was compared. Results: Spontaneous abortion rate was in normal range in all groups. Only in the small subgroup of the INFβ-1b exposed pregnancies (n=21) there was a spontaneous abortion rate of 28 %. There were two major congenital anomalies in the GA group: atrioventricular channel and clubfeet (OR 5.98, 95% CI 0.64–27.15), and none in the interferon cohort. Preterm delivery rate was not different among the cohorts. The adjusted mean birth weight of the term newborns was in all groups in normal ranges. However, it is noticeable that the children in the GA cohort had a higher birth weight (3462 g) than the healthy controls (3384 g), whereas the newborns in the IFNβ cohort (3206 g) had a lower birth weight compared to the healthy controls and to the MS-controls (3372 g). These differences were all significant ($p<0.001$). Conclusion: Our findings suggest that neither INFβ nor GA constitute a major teratogenic risk. The increased abortion rate we observed among INFβ-1b exposed pregnancies may be incidental due to the small number of cases.

24

BAKHIREVA LN[1], TUCKER CM[2], SCHATZ M[3], JONES KL[4], SLYMEN DJ[5], KLONOFF-COHEN HS[4], GRESHAM L[5], JOHNSON D[4], CHAMBERS CD[4], OTIS COLLABORATIVE RESEARCH GROUP[6]. [1]University of New Mexico, Albuquerque, NM, United States, [2]Midwestern University, Glendale, AZ, United States, [3]Kaiser-Permanente Medical Center, San Diego, CA, United States, [4]University of California, San Diego, La Jolla, CA, United States, [5]San Diego State University, San Diego, CA, United States, [6]Organization of Teratology Information Specialists, San Diego, CA, United States.
Asthma Exacerbations During Pregnancy: The Role of Fetal Sex

Background: Asthma is a prevalent chronic disorder which might substantially complicate pregnancy. Some recent studies suggest that the presence of a female fetus might be associated with worse maternal asthma symptoms during pregnancy due to upregulation of maternal inflammatory pathways. On the other hand, improvement in maternal asthma symptoms in the presence of a male fetus is thought to be due to surge of testosterone produced by the male fetus during the second trimester. Methods: Between 1998 and 2003 information about maternal asthma, pregnancy complications, and perinatal maternal and fetal outcomes was prospectively collected from 819 women enrolled in the Organization of Teratology Information Specialists (OTIS) Asthma Medications in Pregnancy study. Information about asthma symptom control and asthma exacerbations was ascertained at each trimester of pregnancy. The risk of exacerbations and poor asthma control was compared among women who gave birth to male versus female children. Results: Asthmatic pregnant women carrying a female fetus had a higher incidence of hospitalizations for asthma during pregnancy (11.2%) compared to women carrying a male fetus (6.1%; $p=0.01$). In multivariate analysis, the presence of a female fetus remained to be significantly associated with a higher incidence of hospitalizations for asthma during pregnancy (OR=1.84; 95% CI: 1.05; 3.21) independent of maternal age, BMI, ethnicity, smoking, and socioeconomic status. Moreover, female-bearing pregnancies tended to be associated with a higher rate of unscheduled asthma clinic visits during the first 20 weeks of gestation (12.8%) compared with male-bearing pregnancies (8.2%; $p=0.06$). Conclusions: The current study suggests that pregnant asthmatic women carrying a girl might be more susceptible to asthma exacerbations. Findings of this study provide some insights on changes in the course of maternal chronic disorders during pregnancy and the role of the fetus.

Molecular and Environmental Pathways Leading to Birth Defects

25

ROBITAILLE J[1], CARMICHAEL SL[2], SHAW GM[2], OLNEY RS[1]. [1]CDC, NCBDDD, Atlanta, GA, United States, [2]March of Dimes Birth Defects Foundation, California Birth Defects Monitoring Program, Berkeley, CA, United States. Maternal Nutrient Intake and Risk for Transverse and Longitudinal Limb Deficiency: Results from the National Birth Defects Prevention Study, 1997-2003

Background: Limb deficiencies are major birth defects that occur in approximately 1 in 2000 newborn infants. In previous studies, periconceptional intake of supplements containing folic acid was associated with reductions in risk. However, the association with specific subtypes of limb deficiency has been inconsistent, potentially due to small number of cases and different methods of classification used. Aims: We investigated whether maternal intake of folate, vitamin B_6, B_{12}, riboflavin, choline, betaine, zinc and methionine through diet alone or use of a supplement containing folic acid influenced the risk for transverse (TLD) and longitudinal limb deficiency (LLD). Methods: Data on deliveries from 1997 to 2003 in the National Birth Defects Prevention Study (NBDPS), a population-based case-control study, were included. The analysis included 323 cases with TLD, 208 cases with LLD, and 5008 controls. A food frequency questionnaire was used to estimate nutrient intakes during the year before pregnancy. Reported use of supplements containing folic acid during the periconceptional period (1 month before through 2 months after conception) was recorded. Odds ratios (ORs) for the association between nutrient intakes and LLD or TLD were calculated using logistic regression and were adjusted (aORs) for maternal age, race/ethnicity, education, energy intake, and body mass index, smoking and drinking during pregnancy. Results: Not taking a supplement containing folic acid periconceptionally did not influence the risk for LLD or TLD. For non-supplement users within (1) the lowest quartile of dietary folate intake, the aOR was 2.36 (95% CI: 0.83-6.69) for LLD; (2) the lowest quartile for riboflavin intake, the aOR was 3.00 (95% CI: 1.01-8.86) for TLD; and (3) the lowest quartile for B_6 intake, the aOR was 3.19 (95% CI: 1.00-10.2) for LLD. For supplement users within (1) the lowest quartile of folate intake, the aOR was 1.57 (95% CI: 0.94-2.63) for TLD; and (2) the lowest quartile for riboflavin intake, the aOR was 1.85 (95% CI: 1.06-3.21) for TLD. Conclusion: Risks for TLD and LLD were not influenced by supplement use per se, but did appear to be associated with low intakes of selected nutrients from diet, particularly among women who did not take a supplement containing folic acid.

26

COLLIER SA[1], BROWNE ML[2], RASMUSSEN SA[1], HONEIN MA[1]. [1]National Center on Birth Defects and Developmental Disabilities, Atlanta, GA, United States, [2]Bureau of Environmental & Occupational Epidemiology, New York State Department of Health, Troy, NY, United States. Maternal Caffeine Intake During Pregnancy and Risk of Orofacial Clefts

Exposure to moderate levels of caffeine during pregnancy is relatively common, but little is known about the potential association between caffeine intake and major birth defects including orofacial clefts. In addition, caffeine might interact with other exposures, such as maternal smoking, to increase risk. The National Birth Defects Prevention Study is a population-based case-control study of major birth defects that collects information on maternal characteristics and exposures through a telephone interview. Single-gene disorders and chromosomal abnormalities are excluded. Mothers are asked to report caffeine intake from coffee, tea, and sodas in the year before pregnancy. We assessed the association between level of caffeine intake (<10, 10-99, 100-199, 200-299, and ≥300 mg/day), frequency of consuming each major source of caffeine (coffee, tea, soda), and cleft lip with/without cleft palate (CL/P) or cleft palate only (CPO). We included infants born October 1997--December 2003. Infants whose clefts were secondary to holoprosencephaly or amniotic band sequence were excluded from this analysis. Models were adjusted for smoking, maternal age, and family history of an orofacial cleft. We stratified by infants with an isolated cleft and those with multiple major unrelated defects. Interviews were completed by mothers of 1,316 infants with CL/P, 707 infants with CPO, and 4,839 liveborn infants with no major birth defects (controls). Among mothers of control infants, 11.9% reported consuming ≥300 mg caffeine per day and 15.5% reported consuming <10 mg caffeine per day; high level consumption (≥3 cups per day) was reported for coffee by 8.0%, for tea by 4.2%, and for soda by 15.3%. Mostly null associations were observed for consumption of < 3 cups per day of coffee, tea, and soda. For high level coffee consumption, the only statistically significant result was a protective effect for CPO with multiple defects (OR=0.4, 95% CI 0.1-0.9). High level tea consumption was associated with CPO with multiple defects (OR=3.1, 95%CI 1.7-5.5). Our data do not suggest an overall association between maternal caffeine intake and CL/P or CPO. Our next step will be to investigate potential interactions between caffeine, alcohol, and tobacco exposure during pregnancy.

27

JURILOFF DM[1], HARRIS MJ[1], GAGNIER L[2], MAGER DL[1,2]. [1]Dept Medical Genetics, University of British Columbia, Vancouver, BC, Canada, [2]Terry Fox Laboratory, BC Cancer Agency, Vancouver, BC, Canada. A Role for DNA Methylation in the Causation of Cleft Lip and Palate in the A/WySn Mouse Model

Introduction: The A/WySn mouse strain models human nonsyndromic cleft lip with or without cleft palate (CLP). In both species, CLP is multifactorial. In A/WySn there are two causative genes, clf1 and clf2, acting together. 15 to 20% of A/WySn have CLP at birth. A long-standing question is the nature of the difference between embryos that develop CLP and embryos with normal face development, when all share the same genes in the same litter. The clf1 mutation was shown to be a defect in function of the Wnt9b gene, apparently due to an inserted IAP-class transposon 6.6 kb away. Antisense transcription from poorly methylated IAPs can interfere with nearby genes. Our new studies tested the hypotheses that differences in the degree of methylation of the IAP at Wnt9b in A/WySn mice determine the cleft/noncleft phenotype by causing differences in Wnt9b transcription levels in the embryonic face. Methods: In embryos carrying the Wnt9b gene from A/WySn, the following were investigated: in GD11 and GD12 embryos the degree of methylation of the IAP in facial tissue was assessed by bisulfite sequencing and COBRA analysis; in the GD11 embryos at the fusion stage of upper lip development, the Wnt9b transcript levels and IAP antisense transcript levels were assayed by quantitative RT-PCR in facial tissue; in the GD12 embryos the lip phenotype (cleft versus normal) was examined. Results: Highly methylated IAPs were associated with lower levels of IAP antisense transcript, higher levels of Wnt9b transcript and normal phenotype. Unmethylated IAP's were associated with higher levels of IAP antisense transcript, lower levels of Wnt9b transcript and with the cleft lip phenotype. All varied within litters. Discussion: It appears that stochastic variation in degree of methylation of this particular IAP causes the dichotomy of face development (cleft lip versus normal) in genetically identical littermates. Based on other models, it is expected that maternal dietary folate and methyl status will affect the level of methylation of this IAP. The A/WySn model raises the possibility that a similar epigenetic mechanism underlies part of the complexity of causation of human nonsyndromic CLP.

28

CARMICHAEL SL, YANG W, CORREA A, OLNEY RS, SHAW GM. March of Dimes, California Research Division, Oakland, CA, United States. Hypospadias and Maternal Intake of Nutrients Related to Methylation

Introduction: Intake of nutrients, especially those related to methylation, continues to emerge as a contributor to many birth defects. Only a few small studies have examined nutrient intake and hypospadias. This study examined whether hypospadias risk is associated with maternal intake of folic acid-containing vitamin/mineral supplements or dietary intake of nutrients related to methylation (folate, choline, vitamins B_{12} and B_6, thiamine, riboflavin, methionine, and zinc). Methods: The study included deliveries with estimated due dates from 10/1997-12/2003 that were part of the National Birth Defects Prevention Study, a multi-state case-control study. Analyses included 915 cases with second or third degree hypospadias (i.e., the urethra opened at the penile shaft, scrotum or perineum) and 2,266 male, liveborn, non-malformed controls. Odds ratios (ORs) and 95% confidence intervals (CI) were estimated from multivariable logistic regression models that included maternal race/ethnicity, education, age, number of previous live births, body mass index, fertility treatments or procedures, plurality, and study site; nutrient-based analyses also included energy intake. Results: The OR for intake of supplements that began in the month before pregnancy or the first month of pregnancy was 1.2 (95% CI 0.9-1.6), and for intake that began in the second or third month was 1.1 (0.8-1.4), relative to women who did not take supplements. Among women who took supplements, reduced hypospadias risk was associated with higher dietary intakes of choline, methionine, and vitamin B_{12}; the respective ORs and CIs for the highest versus lowest quartiles were 0.7 (0.5-1.1), 0.6 (0.4-0.9) and 0.7 (0.5-1.0). Among women who did not take supplements, increased risk of hypospadias was associated with higher dietary intakes of folate and vitamins B_6 and B_{12}, but these estimates were much less precise due to smaller sample size; the respective ORs and CIs were 1.4 (0.5, 4.2), 1.5 (0.5-4.2), and 3.1 (1.1-9.0). Discussion: This study suggests an association of hypospadias risk with intake of certain nutrients related to methylation.

TS/NBTS Joint Platform Session IV

CNS and Prenatal Exposures: Teratological and Neurodevelopmental Outcomes

29

EINARSON A, CHOI J, KOREN G. The Hospital for Sick Children, The Motherisk Program, Toronto, ON, Canada. Incidence of Major Malformations in Infants Following Antidepressant Exposure in Pregnancy: Results of a Large Cohort Study

Background: To date, a number of published epidemiologic studies have not documented an increase risk for major malformations associated with antidepressant use in pregnancy. However, controversy still surrounds the use of these drugs in pregnancy and warnings have been released by national health agencies regarding the possible adverse effects to infants following exposure during pregnancy. Our objective was to ascertain if antidepressants as a group increases the risk for major malformations, as well as assessing each individual antidepressant. Methods: At The Motherisk Program, we analyzed pregnancy outcomes of 1243 women from our prospectively collected cases in our data base, who were exposed to antidepressants during their pregnancy. We then compared them to a matched comparison group of 1243 women who were not exposed (non-teratogen group). Results: 928 women who fit the criteria for inclusion who were exposed in the 1st trimester of pregnancy and also gave birth to a live born infant, were matched to 928 in the comparison group. There were 30(3.2%) major malformations in the antidepressant group and 31(3.3%) in the comparison group. OR 0.9 (95% CI 0.5-1.61). The antidepressants included in the analysis were: bupropion (113) citalopram (184), escitalopram(21), fluvoxamine(52) nefazodone(49), paroxetine(148), mirtazepine(68), fluoxetine(61), trazodone(17) venlafaxine(154), sertraline(61) Conclusion: Use of antidepressants as a group in the first trimester of pregnancy, is not associated with an increase risk for major malformation above the baseline. No individual antidepressant was associated with an increase risk of a specific malformation.

30

MCVEARRY KM[1], MEADOR K[2]. [1]Georgetown University Department of Neurology, Washington, DC, United States, [2]University of Florida McKnight Brain Institute, Gainesville, FL, United States. Antiepileptic Drugs as Cognitive Teratogens: A Prospective Study of Creativity in Children Exposed to Valproate, Carbamazepine, and Lamotrigine Monotherapy

Background: Rodent studies demonstrate that antiepileptic drugs (AEDs) induce a proapoptotic effect during rapid brain growth and synaptogenesis that, in humans, equates to the third trimester and early postnatal development. Third trimester apoptosis in cortical regions that develop to mediate associative neural activity would be expected to impair associative cognitive processes – associative processes like divergent thinking that comprise the human capacity for creativity. Objectives: This prospective observation study investigates differential cognitive outcomes for three commonly used antiepileptic drugs (carbamazepine, lamotrigine, and valproate), with an emphasis on outcomes indicative of impaired creativity. Methods: Operationalizing creativity as 'divergent thinking', we measure cognitive fluency and originality using the Torrance Thinking Creatively in Action and Movement (TCAM). Subjects include a prospective clinical cohort (n=42) between 3.5 and 5 years of age (mean age = 4.17 years) from mother-child pairs who were exposed *in utero* to AED monotherapy for the management of maternal epilepsy. Results: Across monotherapy groups, this population of children show mean fluency of 91.2 (SD=16.0), which is significantly lower than the normal population (p=0.001). This difference is not evident for originality (mean=97.7, SD=15.7). Among monotherapy groups, the children exposed to valproate exhibit the lowest scores for fluency (ANOVA p=0.003) and originality (ANOVA p=0.009). Conclusions: Although the mechanisms teratogenesis in third trimester brain development remain poorly understood, these outcomes exhibit increased risk of impaired cognitive function in children with prenatal exposure to AED monotherapy.

31

VON EHRENSTEIN OS, MIKOLAJCZYK RT, ZHANG J. National Institute of Child Health & Human Development/NIH, Bethesda, MD, United States. Intrauterine Growth During Different Time Windows in Relation to Mental Development at 13 Months Postpartum

Introduction: Fetal growth restriction is known to adversely affect postnatal child development. Specific patterns of growth restriction in relation to later development, however, are less well understood. The aim of this analysis was to investigate the impact of intrauterine growth velocity during different time windows on infant mental development after 13 months. Methods: Women were recruited at their first antenatal visit at the hospitals participating in the NICHD Study of Successive Small for Gestational Age Births in Scandinavia. In this analysis, fetal growth assessment was based on serial ultrasound measurements at 3 time points in pregnancy - 17, 25, and 33 weeks of gestation - and birth weight in a cohort of 476 women who were at a higher risk for fetal growth restriction. In addition, a reference sample of 561 women randomly selected from the same base population was used to calculate a growth reference. Mental development was assessed with the Bayley Scales of Infant Development at 13 months postpartum producing a Mental Development Index (MDI). Growth velocity between pairs of consecutive ultrasound measurements, and the last ultrasound and birth was calculated and transformed into z-scores using the reference sample as standard while accounting for the time between the measurements. Associations between fetal growth and the MDI scores were assessed with locally weighted non-parametric regression models separately for each time window. Results: Relatively lower growth velocity during the gestational time periods 17 to 25 weeks and 25 to 33 weeks was associated with decrements in the MDI; lower growth (per unit of the z-score) in these time windows was related to significant decreases in the MDI scores of 1.43 (95%CI 0.33-2.52; p-value=0.011) and of 1.73 (0.69-2.78; p=0.00124), respectively. Relative growth velocity after 33 weeks of gestation had only little impact on MDI scores in our sample. Discussion and Conclusions: Lower intrauterine growth velocity observed in the early 2nd trimester and lasting until the early 3rd trimester was related to small but significant decrements in mental development at the age of 13 months. These findings add to the understanding of the timing and pattern of restrictions in fetal growth velocity with regard to long lasting postnatal effects on mental development.

32

YOLTON K[1], KHOURY J[1], LANPHEAR B[1], SUCCOP P[2], LESTER B[3]. [1]Cincinnati Children's Hospital Medical Center, Cincinnati, OH, United States, [2]University of Cincinnati, Cincinnati, OH, United States, [3]Brown University, Providence, RI, United States. Low-Level Prenatal Exposure to Tobacco Smoke and Newborn Neurobehavior

Background: Tobacco use during pregnancy, reported by 11% of US women, is associated with adverse effects in the newborn. The effects of low-level tobacco or environmental tobacco smoke (ETS) exposure of pregnant woman on newborn neurobehavior are uncertain. Few studies have examined the earliest neurobehavioral effects of prenatal tobacco exposure which may be evident during the newborn period. Objective: To examine the impact of prenatal tobacco smoke exposure on newborn neurobehavior. Methods: 318 newborns of primarily nonsmoking women were examined using the NICU Network Neurobehavioral Scale at 4-weeks (34.4 days). Prenatal exposure to tobacco was measured using a log of the maximum of serial maternal serum cotinine levels collected at 16 and 26 weeks gestation and delivery. Multiple linear and logistic regressions were used for analyses. Covariates were retained in the final model if they were significant ($p < .05$) or changed the cotinine estimate by > 10%. Results: 47% of newborns were male, 30% were black, with mean birth weight 3449 g, and gestational age 39.2 weeks. Given a significant race by cotinine interaction and significantly higher cotinine levels among blacks when compared with nonblacks, black and nonblack newborns were examined separately. In multivariate analyses, including relevant covariates, prenatal tobacco smoke exposure was associated with decreased attention and increased autonomic stress among nonblack newborns, and increased self-regulation and decreased stress signs among black newborns. Conclusions: Prenatal tobacco smoke exposure, including ETS, is associated with significant neurobehavioral outcomes during the newborn period that vary widely by race.

33

MURAWSKI N, BURMAN M, BROWN K, STANTON M. University of Delaware, Newark, DE, United States. Binge Ethanol Exposure Over Postnatal Days 4-9 and 7-9 Produces Deficits in Trace and Long-Delay Eyeblink Conditioning in the Rat

Ethanol exposure in rats from Postnatal Day (PD) 4-9 is an accepted rodent model of Fetal Alcohol Spectrum Disorders (Brown et al., 2007, *Dev. Psychobiol.*, 49, 243–257). Binge ethanol exposure over PD 7–9 produces modest deficits in place learning in the water maze and modest hippocampal damage (Marino, et al., 2004, *Int J Dev Neurosci*, 22, 363-377). We examined the generality of the effects of PD 4-9 and 7-9 ethanol exposure to a trace eyelid conditioning (EBC) task that is known to depend on cerebellar-hippocampal interactions (Ivkovich & Stanton, 2001, *Neurobiol. Learn. Mem.*, 76, 426-446). Rat pups were exposed to a single high-dose (4.64 g/kg) of ethanol over PD 4-9 or 7-9 and tested as juveniles on trace and long-delay EBC. Because trace EBC is more affected by hippocampal damage than long-delay EBC (ibid), we predicted that trace EBC would show greater ethanol-induced impairment. Ethanol exposed rats showed impairment on both EBC tasks relative to sham and undisturbed controls. The results reflect poorer EBC in ethanol-treated rats relative to control groups without significant effects involving exposure period or task. The results fail to confirm our hypothesis and suggest that ethanol-induced injury of the cerebellum is sufficient to account for our findings. Any hippocampal damage by neonatal ethanol exposure that may have occurred was likely "masked" by the effects of cerebellar injury on EBC. Supported by AA014288-01; 1-F31 AA016250-01.

34

HANDU SS[1,2], DATTA H[2], SANKARANARAYANAN A[2], JAMES H[1], AL KHAJA KAJ[1], SEQUEIRA RP[1]. [1]Department of Pharmacology & Therapeutics, College of Medicine & Medical Sciences, Arabian Gulf University, Manama, Bahrain, [2]Department of Pharmacology, Postgraduate Institute of Medical Education and Research, Chandigarh, India. Prenatal Exposure to Cocaine Alters Neurobehavioral Developmental Milestones in Rats

Introduction: This study was undertaken to assess the neurobehavioral effects of prenatal exposure to cocaine in rats. Methods: Pregnant Wister rats received either 20mg/kg of cocaine hydrochloride or 0.9% saline subcutaneously daily from gestation day 14 through day 20. A third group of dams was left untreated and considered as untreated controls. A factorial design for fostering was employed to separate the prenatal behavioural effects from the postnatal maternal behavioral influence of gestational treatment. Offspring were examined for physical landmarks, sensory and neuromuscular maturation as also behaviour, using a test battery in the pre-weaning and post-weaning periods. The test battery comprised of surface righting reflex, swimming development, cliff avoidance, negative geotaxis, auditory startle, air righting, visual placing, open-field, rotarod and passive avoidance reflex. Each test was scheduled on a different postnatal day. Results: Cocaine significantly reduced the birth weight and delayed eye opening of offspring. The development of swimming, cliff avoidance and negative geotaxis was delayed whereas startle response was accelerated. No significant changes were seen in the open field, rotarod and passive avoidance tests. Cocaine-induced open field activity on postnatal day 35 did not show any significant alteration compared to the control pups. Discussion: These results indicate that prenatal cocaine exposure alters development of several indices of postnatal neurobehavioral ontogeny. These alterations may be related to delay in morphological and/or neurochemical maturation in the central nervous system, resulting from effects of cocaine on dopaminergic and adrenergic pathways. These subtle alterations find expression in the form of changes observed in the behavioral ontogeny of the animal. Some such behavioural alterations are reported in the study.

35

DOW-EDWARDS D, ZHAO N, JOZWICKA A. State University of New York, Brooklyn, NY, United States.
Intravenous Cocaine Administration Throughout Pregnancy in the Rat: Preliminary Results

Prenatal cocaine exposure remains a problem since many exposed children are approaching adolescence which is a critical time in terms of education and life style choices. The advantage of studying animal models, of course, is that adolescence is achieved in a few weeks as opposed to years for the human. Further, since most of the women who abused cocaine during pregnancy smoke crack, the best preclinical model would incorporate the pharmacodynamics of crack smoking. For these reasons, we developed an intravenous (iv) port model with many similarities to that developed by Mactutus and Booze but adapted the surgical procedures from the intravenous self-administration researchers (Kantak in particular). To date, we have collected maternal/fetal data on dams receiving 3mg/kg cocaine three times a day and examined several behaviors including locomotor activity, passive and active avoidance, attention and acoustic startle. Results show that juvenile males exposed to iv cocaine prenatally have a greatly facilitated long term memory in a passive avoidance test, adult females have an impaired retention of active place avoidance and both sexes show impaired performance on an attention test when studied during adolescence. The results demonstrate that maternal iv cocaine produces a different constellation of effects compared to other routes of administration and that iv is a reliable means to deliver drugs to pregnant rats.

Platform Session V

Risk Factors for Adverse Birth Outcomes From Medications to the Environment

36

REEFHUIS J[1], HONEIN MA[1], SCHIEVE LA[1], CORREA A[1], HOBBS CA[2], RASMUSSEN SA[1]. [1]NCBDDD, CDC, Atlanta, GA, United States, [2]University of Arkansas for Medical Sciences, Little Rock, AR, United States. Use of Clomiphene Citrate and Selected Major Birth Defects: Data from the National Birth Defects Prevention Study, U.S.A. 1997-2004

Background: Reports of use of ovulation stimulating drugs have increased in the U.S. from 3% in 1995 to 3.8% in 2002, with clomiphene citrate [CC] being the most commonly used. A possible association between maternal use of CC and birth defects has been suggested but remains unclear. Objective: To evaluate the relation between use of CC and major birth defects. Methods: We used data from the National Birth Defects Prevention Study, a multi site case control study studying risk factors for birth defects. Case-infants with major birth defects were ascertained from birth defects surveillance systems in 10 states and control-infants were randomly selected from liveborn infants with no birth defects in the same populations; cases and controls were limited to births from 10/1/1997 - 12/31/2004. Participant mothers completed a detailed telephone interview on pregnancy exposures including use of CC. Exposure was defined as CC use with or without artificial insemination in the 2 months before conception or the first month of pregnancy without the use of any other fertility drugs. Analyses for this abstract were limited to singleton births to mothers without pre-existing diabetes and were adjusted for maternal age, prepregnancy body mass index, study center, and maternal education. Logistic regression was used to calculate adjusted odds ratios [aOR] for ten defects that had at least 5 exposed cases. Results: Use of CC was reported by 267 (1.8%) of case mothers versus 66 (1.2%) of control mothers. We found increased odds of CC use for anencephaly (6 exposed cases [exp]: aOR 2.7, 95% confidence interval [CI] 1.1-6.4), esophageal atresia (10 exp: aOR 3.0, CI 1.5-6.0), hypospadias (21 exp: aOR 2.1, CI 1.2-3.7) and transverse limb deficiencies (7 exp: aOR 2.4, CI 1.1-5.5). Conclusions: CC is associated with some birth defects in our data. Further study is warranted to elucidate the basis of these associations.

37

ABELA D, WEBSTER WS, RITCHIE HE, GAVIN C, KARLSSON K. The University of Sydney, Sydney, Australia. The Effect of Some Cardiac Ion Channel Blockers of the Rat Embryonic Heart *In Vitro*

There is experimental evidence that hypoxic episodes during pregnancy can induce structural abnormalities in the developing embryo, in particular, transverse limb defects. Embryonic hypoxia can be induced experimentally either indirectly by affecting the dam or directly by slowing the embryonic heart with cardioactive chemicals. There is some evidence from rodents that the ion channels necessary for action potential generation in the heart may differ between the adult animal and embryos. For instance, drugs such as dofetilide and almokalant that block the potassium current Ikr cause a concentration-dependent slowing and sometimes arrhythmia of the embryonic heart while having no effect on the adult heart. When these drugs are administered to pregnant rats they cause severe bradycardia in the embryos resulting in hypoxia. The resultant tissue damage causes congenital malformations such as limb reduction defects and cleft lip. It has also been proposed that the human teratogen phenytoin exerts its teratogenic effect by inhibition of Ikr but this is complicated by the fact that phenytoin also inhibits sodium and calcium channels. As part of a study to examine the effects of ion channel blockers, both alone, and in combination, on the embryonic heart, gestational day 13 embryos were cultured with the yolk sac open and the amnion removed in 2.5 ml of Dulbeccos solution (1 embryo/culture flask). The bottles were placed on a rotator inside an incubator and were continuously gassed with 95% 0_2, 5% $C0_2$. After 1 hr, the embryonic heart rate was counted. The embryos were then exposed to a range of ion channels blockers either alone or in combination and the effect on the embryonic heart measured one hour later. Calcium, sodium and potassium blockers all produced a concentration-dependent slowing of the embryonic heart. Arrhythmias were also seen with each class of drug, mainly associated with severe bradycardia. It is anticipated that studies of combinations of these ion channel blockers will help to elucidate the inter-dependence of these channels in maintaining a normal embryonic heart rhythm and heart rate.

38

BROUSSARD CS[1], REEFHUIS J[1], FRIEDMAN JM[2], RASMUSSEN SA[1], JANN MW[3], HONEIN MA[1]. [1]Centers for Disease Control and Prevention, Atlanta, GA, United States, [2]University of British Columbia, Vancouver, BC, Canada, [3]Mercer University, Atlanta, GA, United States. Opioid Analgesic Treatment During Pregnancy and Adverse Fetal Outcomes: Results from the National Birth Defects Prevention Study, 1997-2003

Introduction: Therapeutic use of opioid analgesics has increased in recent years. Whereas opioid analgesics are generally considered safe during pregnancy, some studies have shown adverse effects on growth. We compared birthweight and gestational age among infants whose mothers were or were not treated with opioid analgesics during pregnancy. Methods: The NBDPS is an ongoing 10-site case-control study of birth defects that includes a maternal telephone interview. This analysis was limited to liveborn, singleton control infants without major birth defects. Controls were randomly selected from live births (1997-2003) identified through vital records or hospital data. Exposure was defined as opioid analgesic treatment for any duration, for ≤7 days, or for >7 days. Children with out-of-range birthweight or gestational age values and mothers with preexisting diabetes were excluded. Multivariable linear regression analysis was performed to compare mean birthweights and gestational ages (separate models) by opioid analgesic treatment adjusted for potential confounders (maternal race/ethnicity, education, prepregnancy BMI, smoking status, and infant sex, including gestational age for the birthweight outcome). Results: Of the 4,560 women included, 176 (3.9%) reported opioid analgesic treatment during pregnancy, and 39 of those (22%) took two or more opioid analgesics. Reasons for treatment did not differ by treatment duration. The prevalence of opioid analgesic treatment was significantly ($p<0.05$) higher in non-Hispanic whites, obese women (prepregnancy BMI≥30), women who smoked during pregnancy, and mothers of male infants. Opioid analgesic treatment was significantly less frequent in women with less than a high school education. After adjustment for these factors, there was no significant difference in birthweight, regardless of treatment duration. However, opioid analgesic treatment was associated with a one-third week decrease in gestational age ($p=0.02$). This difference was greater in those treated longer than a week ($p=0.006$) but was not significant with treatment duration of less than a week. Discussion: These findings suggest that opioid analgesic treatment or the underlying diseases for which these drugs are used might affect gestation more than fetal growth.

39

HRUBEC TC[1,2], CHAVAN V[2], LINDSAY DS[2], HOLLADAY SD[1]. [1]E. Via Virginia College of Osteopathic Medicine, Blacksburg, VA, United States, [2]VA-MD Regional College of Veterinary Medicine, Virginia Tech, Blacksburg, VA, United States. Fetal Outcome of Congenital Toxoplasmosis Is Improved With Maternal Immune Stimulation

Toxoplasma gondii, a protozoan parasite which annually infects 1.5 million people in the US, can have devastating effects on the developing fetus if infection occurs during pregnancy. Congenital toxoplasmosis results in stillbirths, hydrocephalus, blindness, mental retardation, and neurological and behavioral disorders. In mice, stimulating the maternal immune system during the peri-conceptual period dramatically reduces teratogen induced birth defects. The protective effects of maternal immune stimulation on infectious causes of birth defects such as those caused by congenital toxoplasmosis are unknown and were investigated in this study. Mice were immune stimulated with either IFNγ or GM-CSF and were then infected orally with 30 *T. gondii* tissue cysts on day 3 of gestation. Fetal malformations and mortality was determined on gestational day 17 from the following treatment groups: Control, IFNγ only, GM-CSF only, *T. gondii* only, IFNγ + *T. gondii*, and GM-CSF + *T. gondii*. Toxoplasma infection decreased the numbers of live fetuses from 93% in control litters to 39.7% in infected litters. Of the fetuses that died from the infection, the percentage of fetuses dying in early pregnancy decreased with the immune stimulation treatments and the number dying in late pregnancy increased, thus indicating greater survival into the last trimester of pregnancy. Toxoplasma infection resulted in death of the entire litter 47% of the time. Immune stimulation with IFNγ or GM-CSF reduced death of the entire litter to 6.7% and 25% of the time respectively. This is the first time maternal immune stimulation with either IFNγ or GM-CSF has demonstrated improved fetal outcome after exposure to an infectious agent. Further studies are needed to determine whether improved gestational outcome translates into improved postnatal function. Supported by USDA AD-421 137196.

40

BOTTO LD[1], BISHOP STONE M[1], BROWNE ML[2], FELDKAMP ML[1], LAMMER E[3], SHAW GM[4], NATIONAL BIRTH DEFECTS PREVENTION STUDY[5]. [1]Dept Pediatrics/Medical Genetics, University of Utah, Salt Lake City, UT, United States, [2]New York State Department of Health, Troy, NY, United States, [3]Oakland Children's Hospital, Oakland, CA, United States, [4]March of Dimes California Research Division, Oakland, Berkeley, CA, United States, [5]National Birth Defects Prevention Study, Atlanta, GA, United States. Maternal Febrile Illnesses and Risk for Congenital Heart Defects: Findings from the National Birth Defects Prevention Study

Maternal fever in early pregnancy is common (5 to 10% in some studies), and has been linked with an increased risk for some malformations. However, there is uncertainty about the risk for heart defects. In this analysis from the National Birth Defect Prevention Study (NBDPS), a population-based case-control study, exposure to first-trimester illnesses and associated fevers was compared between 5608 subjects with heart defects and 5008 unaffected controls. Odds ratios were computed for the risk of heart defects associated with febrile illnesses during the first trimester, compared to no fever or infection during the first trimester, and adjusted for multiple potential confounders. First-trimester febrile illnesses were reported by 8.6 % of control mothers. Reporting a febrile illness was associated with a moderately increased risk for some heart defects (odds ratios, 1.3 to 3.0). For example, increased odds ratios were observed for fever from respiratory illnesses with heterotaxy; fever from urinary tract infections with right-sided obstructive defects; and fever from other sources with left-sided obstructive defects and d-transposition of the great arteries. In general, such increased odds ratios appeared to be reduced among periconceptional vitamin users. Febrile illnesses could be a preventable risk factor for some, though not all, heart defects.

41

HOLMES LB[1,2], SMITH CR[1,2], HERNANDEZ-DIAZ S[1,3]. [1]North American AED Pregnancy Registry, Boston, MA, United States, [2]Genetics Unit, MassGeneral Hospital for Children, Boston, MA, United States, [3]Harvard School of Public Health, Boston, MA, United States. Pregnancy Registries: Larger Sample Sizes Essential

Introduction: Most anticonvulsant drugs are teratogenic. The risks vary widely among drugs. Pregnancy registries were developed to improve data on fetal risks from "new" drugs. Methods: Over 6,000 women from US and Canada have enrolled in the North American AED (antiepileptic drug) Pregnancy Registry since 1997. Of 24 mono-therapies evaluated, only two, phenobarbital (Holmes LB et al: Arch Neurol 2004; 61:673-8) and valproate (Wyszynski DF et al: Neurol 2005; 64:961-5), have shown a dramatic increase in the rate of all malformations (RR 3.4and 5.9) in small sample sizes (PB=77); VPA=149). 952 and 913 infants exposed to lamotrigine (LTG) and carbamazepine (CBZ) did not show significant increases in all malformations, but did have increases for oral clefts (RR 8.1 and 8.4), in comparison to the prevalence of isolated oral clefts (0.7/1,000) among 206,224 unexposed newborn infants at Brigham and Women's Hospital (BWH), Boston. Results: In 2007, using less stringent release criteria, findings were released for six more drugs used as monotherapy: phenytoin (10/390=2.6%); clonazepam (2/50=4%); gabapentin (1/127-0.8%); topiramate (8/197=4.1%); oxcarbazepine (2/121=1.7%) and levetiracetam (4/197=2%). Only one drug showed a significant risk for all malformations: topiramate: 4.1% (RR 2.5; 95 CI 1.3-5.0 compared to BWH Surveillance [rate 1.62%] (Nelson K et al: N Engl J Med 1989; 320:19-23). There were 7 different malformations in the topiramate-exposed infants; two infants had a cleft lip deformity. Discussion: These findings do not reach the release criteria for all malformations (lower 95 CI greater than 2.0) or the "Rule of Three" for specific malformations. These smaller sample sizes for these six drugs did not have statistical power to identify a 2X increase in all malformations in comparison to the external comparison group at BWH; more data is needed. A sample of 555 has 80% power to identify a two-fold increase in all malformations. Pregnancy registries should continue to enroll eligible women until they reach these larger sample sizes and can identify increased risks for specific malformations. We have documented an increased frequency of oral clefts after exposure to PB, VPA, CBZ, LTG and, now, possibly topiramate. The challenge is to understand why. The Registry is supported by Abbott, Eisai, GlaxoSmithKline, Novartis, Ortho-McNeil and Pfizer.

42

GELINEAU-VAN WAES J[1], MADDOX J[1], WILBERDING J[1], VOSS K[2], RILEY R[2]. [1]University of Nebraska Medical Center, Omaha, NE, United States, [2]USDA-ARS Toxicology & Mycotoxin Research Unit, Athens, GA, United States. Placental and Neural Tube Defects After Maternal Fumonisin or FTY720 Exposure: Role of Bioactive Sphingolipids

Introduction: Fumonisin B1 (FB1) is a mycotoxin produced by a common fungal contaminant of corn. Increased neural tube defect (NTD) risk is observed after maternal FB1 exposure in human populations that rely on corn as a dietary staple. FB1 inhibition of ceramide synthase results in elevated sphingoid bases. FTY720 is a sphingoid base analog currently in Phase III human clinical trials as an immunosuppressant drug. FTY720 is phosphorylated by *sphingosine kinase* to the bioactive compound FTY720-1-P which modulates S1P receptor-mediated pathways involved in lymphocyte chemotaxis. Methods: FB1 (20mg/kg/day ip, E7.5-8.5) or FTY720 (10mg/kg/day po, E6.5-8.5) were administered to pregnant SWV and LM/Bc mice. Plasma samples were collected on E10.5, and whole blood spotted on Guthrie cards prior to sacrifice. Embryonic phenotype was recorded, and placental/embryonic tissue collected for histology, or LC-ESI-MS analysis of sphingoid base 1-phosphates. Placental morphology was observed by H&E staining. Trophoblast cells were labeled with cytokeratin, and uterine natural killer (uNK) cells were identified with DBA lectin. Strain and/or treatment-specific differences in placental sphingolipid gene expression were analyzed by qRT-PCR. Results: Maternal FB1 or FTY720 resulted in accumulation of bioactive sphinganine-1-P or FTY720-1-P in maternal blood and placental tissue, and increased incidence of NTDs and/or resorptions. *Sphingosine kinase* gene expression was significantly elevated in placental tissue from treated dams. Histological sections of placentas harvested from exencephalic embryos demonstrated a shallow ectoplacental cone, fewer uNK at the implant site, proliferative and invasive giant trophoblast cells, and a disorganized vascular labyrinth. Discussion: Maternal FB1 or FTY720 exposure results in an accumulation of bioactive sphingoid base-1-P in maternal and fetal tissue, altered migration of uNK cells, abnormal formation of the placenta, and increased risk for NTDs. Sa-1-P and FTY720-1-P act as agonists or functional antagonists at the various S1P receptor subtypes. Elevated levels of Sa-1-P or FTY720-1-P may therefore alter S1P-receptor-mediated signaling pathways involved in uNK migration, formation of the placenta and neural tube closure.

43

FRANCIS EZ[1], TIMM G[1], LAESSIG S[1], BAYNE E[2]. [1]US Environmental Protection Agency, Washington, DC, United States, [2]American Schools of Public Health, Washington, DC, United States. EPA's Endocrine Disruptors Programs: Research Used in Agency Decision-Making

In 1996, the EPA's Office of Research and Development (ORD) identified endocrine disruptors as one of its top six research priorities. In the same year, through enactment of the Food Quality Protection Act and amendments to the Safe Drinking Water Act, the U.S. Congress directed EPA to screen pesticides and drinking water contaminants, respectively, for their potential estrogenic or other endocrine activity in humans, using validated studies. First, a number of scientific questions needed to be addressed through research. EPA's research program and the development and implementation of the mandated Endocrine Disruptor Screening Program (EDSP), therefore, have been on parallel highly interactive tracks. *ORD's Endocrine Disruptors Research Plan* was published in1998. Since then, ORD has developed a *Multi-Year Plan for Endocrine Disruptors* that identifies the specific elements that will be addressed over the next five to ten years. In the *Multi-Year Plan*, ORD has identified three Long-Term Goals (LTGs) that will provide the Agency the methods it needs to implement EDSP and the scientific underpinnings to be able to interpret data from EDSP and incorporate them into risk assessments and Agency decisions. Research conducted under one of the LTGs has resulted in the development/refinement of 19 *in vitro* and *in vivo* assays in support of implementation of EDSP. Particular attention has been focused on refining mammalian assays for estrogen, androgen, and thyroid activity and in developing and standardizing amphibian and fish bioassays. As ORD completed the development of the scientific methods, EDSP put them through rigorous validation and peer review processes. Combinations of these assays will be used in the two tiered EDSP. Tier 1 assays will identify substances that have the potential to interact with the endocrine system. Tier 2 assays will provide dose-response data across multiple generations for those substances determined to need further testing. The Tier 1 battery of assays proposed by EPA was reviewed by the Agency's Scientific Advisory Panel in March. Orders requiring industry to conduct the screening of the first set of chemicals will be issued during the summer of 2008. EPA's research program and EDSP have integrated their efforts to help the Agency achieve a long term outcome of reducing or preventing risk to humans and wildlife from exposure to endocrine disruptors. It is expected that the lessons learned through this process will serve the Agency well as it addresses the recommendations of the 2007 NAS report on *Toxicity Testing in the 21st Century*.

Platform Session VI
Research Methods Update From Laboratory to the Clinic

44

CHERNOFF N, ROGERS EH, GAGE MI. U.S. Environmental Protection Agency, Research Triangle Park, NC, United States. Maternal and Fetal Toxicity in Developmental Toxicology Bioassays: Weight Changes and Their Biological Significance

Standard developmental toxicology bioassays are designed to identify agents with the potential to induce adverse effects in the embryo/fetus. Guidelines call for the inclusion of a dose level(s) that induces "overt maternal toxicity". The possibility that general maternal toxicity can affect development has lead to attempts to define general relationships between maternal and developmental endpoints. This study constitutes an analysis of 125 rat, mouse and rabbit developmental toxicity bioassays conducted by the National Toxicology Program from 1981 to 2003. The data indicate that weight is a highly significant factor in determining both maternal and fetal Lowest Observable Adverse Effect Levels (LOAELs). Maternal LOAELs were determined by reduced gestational weight (wt) gain alone in 60% of mouse and ≥80% of rat and rabbit studies (the percentages are ≥86% in all species at dose levels where another toxic effect was also noted). Fetal LOAELs were set by reduced term wt alone in 71% of rat, 82% of mouse and 11% of rabbit studies. For specific dose groups in the studies examined, correlation of fetal and maternal wt reductions varied between species; significant correlations were noted in the rat ($p<0.05$), and mouse, ($p<0.01$), but were n.s. in the rabbit. Analysis of maternal and fetal wts in the rat shows that the time of maternal wt loss during gestation is a major determinant in the fetal response. Significant fetal wt reductions at term in the rat occurred in 82% dose levels where maternal wt reductions were noted after GD15 as compared to 16% in studies where maternal wt changes only occurred before GD15. The magnitude of reductions in fetal wt and maternal wt gain at term is significantly correlated in both the rat ($P>0.01$) and mouse ($P>0.05$). The NTP data indicate that maternal wt reductions are associated with reduced food and/or water intake for a wide variety of dissimilar test agents. It is well known that maternal undernutrition, especially during the period of rapid fetal growth late in gestation, will result in reduced fetal wt at term. This raises the possibility that reported developmental toxicity based on reduced fetal wt at term may, in numerous instances, be due to maternal undernutrition caused by agent-induced general toxicity rather than any direct developmental insult. Consequently, such test agents may be erroneously classified as primary developmental toxicants. The analysis reported here indicates the need for paired feeding studies to determine to what extent observed fetal wt changes are due to maternal undernutrition, in contrast to a direct toxic action on the developing embryo/fetus.

45

CAMPBELL MA[1], GOLUB MS[2], IYER P[2], KAUFMAN FL[2], LI LH[2], MORAN F[2], MORGAN JE[2], DONALD JM[2]. [1]Office of Environmental Health Hazard Assessment, Cal/EPA, Oakland, CA, United States, [2]Office of Environmental Health Hazard Assessment, Cal/EPA, Sacramento, CA, United States. Reduced Water Intake: Implications for Rodent Developmental and Reproductive Toxicity Studies

In developmental and reproductive toxicity studies, drinking water is a common means of delivering the test agent. Reduced consumption of toxicant-containing water raises questions about indirect effects of reduced maternal fluid consumption resulting from unpalatability, versus direct effects of the test compound. This paper will review evidence pertaining to the validity of assuming direct links between palatability of drinking water, reduced fluid consumption, dehydration, resulting maternal stress, and adverse effects on reproduction and/or fetal development. Issues to consider include objective assessment of dehydration and thirst, the relative contributions of innate and learned behaviors to drinking behavior and flavor preference, and the objective assessment of physiologic stress. Not only do lab animals under *ad lib* conditions consume more water than the minimum required to maintain fluid balance, animals faced with water restriction have substantial physiologic capacity for protection of metabolic processes. Hence fluid intake data alone are insufficient to accurately assess hydration state. Measures of blood biochemistry can provide quantifiable, objective indications of fluid balance, but changes in these parameters could result from other causes such as effects of a test toxicant. Consummatory behaviors in response to perceived need are highly influenced by learning. Hence the drinking behavior, water intake, and flavor acceptance/preference of animals used in toxicology experiments could be subject to learning experiences with the test compound. Physiological symptoms of stress produced by water deprivation may be distinguishable from the symptoms associated with other generalized stressors, such as food deprivation, but doing so may be beyond the scope of most developmental or reproductive toxicity studies. Use of concurrent controls, paired to test groups for water consumption, could help distinguish between the direct effects of a test toxicant as opposed to effects of reduced water consumption alone. Overall, it should be recognized that alterations in drinking behavior might represent the experimental animal's attempt to balance its metabolic requirements for water with avoidance of a toxic substance.

46

SCHELLPFEFFER MA, KOLESARI GL. Medical College of Wisconsin, Milwaukee, WI, United States. EKG-Gated Echocardiography in the Developing Chick Embryo Heart

Introduction: Ultrasound imaging is increasingly being used in small animal models to investigate cardiac structure and function. Ultrasound imaging of small animal embryos offers unique challenges and opportunities for teratologic research. Embryonic cardiac structure and function can be studied in this way. To effectively study normal and abnormal embryologic cardiac development electrocardiographic (EKG) documentation of systole and diastole is critical. To date, an EKG-gated echocardiography has not been accomplished in an embryonic animal model. This study demonstrates that EKG-gated echocardiography is possible in the chick embryo model. Material & Methods: Purebred White Leghorn chick embryos were used from incubation day 4-19. The embryos were exteriorized by opening the air cell at the blunt end of the egg. The air cell membrane, chorio-allantoic membrane, and amnion were incised with micro-cautery and the embryo was accessed. Thermo-regulation was maintained with a portable covered incubation chamber. Later stage embryos were paralyzed with pancuronium to avoid movement artifact. An EKG was obtained using either silver wire electrodes with early stage embryos or 30g needle electrodes with later stage embryos. The signal was amplified with a Grass Model 511 AC preamplifier. Echocardiography was then performed using either a Visualsonics Vevo 770 ultrasound unit with a 30 or 55 MHz transducer or Accuson Sequoia 512 ultrasound unit with a 15 MHz mouse research transducer. Results: EKG-gated B-mode and M-mode images were reliably obtained of the chick embryo hearts from day 4-19. Spectral Doppler waveforms were also reliably obtained from the venous and arterial sides of the embryonic heart as well across the AV valves and aortic and pulmonic valves. Stroke volume and cardiac output measurements were obtained as well as other cardiac functional assessments. Discussion: Embryonic EKG-gated echocardiography offers a promising means of non-invasively studying normal and abnormal cardiac development in this classic model for teratologic research, the chick embryo. Especially with Doppler flow techniques non-invasive assessments can be done of chick embryo cardiac functional development as well.

47

SINGH AV[2], SHAH I[1], KAVALOCK RJ[1], KNUDSEN TB[1]. [1]National Center for Computational Toxicology, Office of Research and Development, USEPA, Research Triangle Park, NC, United States, [2]Lockheed Martin, Research Triangle Park, NC, United States. Knowledge Base for *v-Embryo*: Information Infrastructure for *In Silico* Modeling

The Virtual Embryo Project (*v-Embryo*) aims to advance EPA's Computational Toxicology program by building capacity for predictive modeling of developmental systems and toxicities. It will address two computational techniques: knowledge-discovery and computer simulation. The former entails a contextual knowledge base (KB) that draws from empirical observations and inference algorithms for reasoning about this data. The KB for *v-Embryo* extends 'Birth Defects Systems Manager' with tools for data-mining (structured data) and text-mining (unstructured data). As a KB framework, we selected the existing developmental ontology compiled for the mouse embryo (http://genex.hgu.mrc.ac.uk/) and a lexicon of 984 metadata terms for fetal abnormalities (http://www.devtox.org). These terms are currently classified into 146 anatomical locations and 3 observational levels (e.g., external, skeletal, soft tissue); however, a new ontological schema is proposed for systems modeling in which the origin of each endpoint is linked to normal developmental ontology. For example, hypospadias is currently mapped to the 'trunk' through its anatomical region (perineum), which is not informative for systems modeling. An alternate approach would be to map hypospadias to a target triad as follows: genitourinary (system), urethra (tissue), and penis (location). That reflects an informative association connecting the defect to its system and development. Building a systems-based ontology for teratology will be a resource-intensive activity best done through a broader network (Wiki) in the developmental toxicology community. To that end, a Wiki is under construction to build and curate the encyclopedia of associative relationships between the description of a malformation, its location, tissue, and system across development as well as windows of vulnerability to teratogen insult. This work has been reviewed by EPA and approved for publication but does not necessarily reflect official Agency policy.

48

SMITH CR, HOLMES LB. North American AED Pregnancy Registry, Genetics Unit, MassGeneral Hospital for Children, Boston, MA, United States. Recruitment of an Unexposed Control Group for a Pregnancy Registry

Introduction: Pregnancy registries typically enroll and follow pregnant women exposed to drug(s) of interest. This design has been criticized because it lacks a control group for comparison. Some pregnancy registries use external comparison, but none has identified a control group that is well matched in methodology and demographic characteristics to the exposed population. The North American AED (antiepileptic drug) Pregnancy Registry has enrolled a group of unexposed pregnant women to be used as a control group. Methods: Since April 2003, several concurrent strategies have been used to enroll controls. Telephone scripts describing control recruitment have been used at enrollment, 7-month, and post-partum interviews. Exposed participants were asked to refer pregnant family members or friends who were not taking AEDs to enroll as controls. A raffle with monetary prizes for both the exposed and control groups was used as incentive. Periodic direct mail and email campaigns were sent to remind participants about the controls campaign. Flyers were included in all study mailings, and notices were included in semi-annual newsletters that were sent to all participants enrolled since 1997. Results: Between 2003 and 2007 we have enrolled 336 unexposed pregnant women. Word of mouth referrals over time yielded 49% of controls enrollment. Direct mail campaigns showed dramatic, yet short term, spikes in control enrollment. A comparison of the first 193 enrolled controls with the 124 exposed participants who referred them, showed no significant difference in demographic data such as maternal age, marital status, race, education level, and parity. The 193 controls were also compared to a larger exposed group (N=4301), again showing no difference in demographic data between the two groups. Discussion: In our experience, a hospital-based AED pregnancy registry can recruit and enroll a demographically similar control group by using friend and family referrals, combined with an integrated marketing strategy to promote the recruitment campaign. By utilizing these methods at the start of overall enrollment, future Registries would be able to use their own control group for analysis. The Registry is supported by Abbott, Eisai, GlaxoSmithKline, Novartis, Ortho-McNeil and Pfizer.

49

JOHNSON K[1], DAVIS J[2], RYAN L[3], MOSER G[2]. [1]NIEHS, Research Triangle Park, NC, United States, [2]Integrated Laboratory Inc., Durham, NC, United States, [3]HistoMax, Durham, NC, United States. Application of Micro-Computed Tomography in Rat Teratology Studies

In a previous, unpublished study, we evaluated magnetic resonance imaging (MRI) as a non-invasive tool to evaluate rat fetuses in teratology studies but found that MRI had an inherent limitation in its ability to visualize skeletal features. Micro-computed tomography (micro-CT) provides three-dimensional isotropic images and is better at detecting skeletal abnormalities than MRI. In this study, we used micro-CT to identify and characterize both soft tissue and skeletal structures of chemically-induced developmental effects in rat fetuses treated with retinoic acid compounds. Pregnant Sprague-Dawley rats were treated by gavage on gestation day 10 with corn oil only or 100 mg/kg all-trans-retinoid acid (TRA) suspended in corn oil. Additional dams were treated on gestation days 9 and 10 with 100 mg/kg 13-cis-retinoic acid (13CRA) suspended in corn oil (5 ml/kg body weight). The day the vaginal plug was found was considered gestation day 0. Dams were humanely sacrificed and fetuses collected on gestation day 20 by caesarean section. Fetuses were grossly evaluated for external malformations and at least fifteen fetuses from each treatment group were randomly assigned to three different evaluation methods: micro-CT image evaluation, Wilson's evaluation or skeletal evaluation. The fetuses undergoing micro-CT evaluation were fixed in formalin, and received two micro-CT scans at Numira Biosciences, Inc. (Salt Lake City, UT). The fetuses were initially scanned for skeletal only images, then the same fetuses were stained with osmium tetroxide for subsequent soft tissue scanning. We have identified skeletal malformations with the micro-CT images and physically with the Alizaran red and Alcian Blue stained skeletons and the greatest number of skeletal malformations were found in the TRA-treated fetuses. The micro-CT evaluation identified skeletal malformations in the clavicle, scapula, humerus, radius, ulna, tibia and fibula that were not noted during the evaluation of the stained skeletons. We have previewed the soft tissue images and found that they provide greater detail than previously unpublished MR images. Our next task is to complete the soft tissue evaluation and compare the results to the Wilson's evaluation.

50

ARMSTRONG MA[1], KASKUTAS LA[2], WITBRODT J[2], TAILLAC C[1], HUNG YY[1], OSEJO V[1], ESCOBAR G[1]. [1]Kaiser Permanente, Oakland, CA, United States, [2]Alcohol Research Group, Emeryville, CA, United States. Using Drink Size to Talk About Drinking During Pregnancy: A Randomized Clinical Trial of Early Start Plus

Introduction: The purpose of this study was to compare two brief alcohol use interventions in prenatal clinics. Methods: In this clinical trial, 15 Kaiser Permanente Northern California obstetric clinics were randomized to either usual care Early Start, a prenatal substance abuse screening and treatment program focused on abstention and integrated with prenatal care (n=417), or Early Start Plus, which supplemented Early Start with a computerized drink size assessment tool and intervention focused on helping women drink less (n=584). Controls included women who screened at risk for alcohol use during pregnancy at comparable Kaiser Permanente obstetric clinics without Early Start services (n=372). Recruitment occurred from 05/01/00-06/30/04. The groups were compared on neonatal and maternal outcomes, including neonatal assisted ventilation, low birthweight, preterm delivery, neonatal intensive care unit admission, infant or mother rehospitalization within two weeks of discharge from birth hospitalization, preterm labor, preeclampsia, placenta previa, and placental abruption. Results: Controls had higher adverse outcome rates than the other two groups. In multivariate analysis, compared to Controls, statistically significant odds ratios were obtained for Early Start Plus for preterm labor (OR=0.44,p=0.04) and Early Start for low birthweight (OR =0.28,p=0.02). No differences in outcome rates between Early Start and Early Start Plus were statistically significant, suggesting that Early Start already provided a high standard of care. Discussion: Early Start Plus was very well received by clinicians and clients alike. It provided clinicians with an innovative assessment tool that facilitated an open, in-depth dialogue about drinking during pregnancy that is difficult to develop when focusing singularly on abstention.